Contract Documents and Detailed Specifications for New Construction of the

LANKFORD EVENT CENTER

Project No. 15045
610 South Main Street
Cedartown, Georgia 30125

CITY OF Cedartown GEORGIA

(770) 748 - 3220
201 East Avenue
Cedartown, Georgia 30125

TABLE OF CONTENTS

CITY OF CEDARTOWN, GEORGIA, FORMS

ADVERTISEMENT FOR BIDS

CERTIFICATE OF NON-DISCRIMINATION

DRUG-FREE WORKPLACE CERTIFICATE

E-VERIFY COMPLIANCE AFFIDAVIT

NON-COLLUSION AFFIDAVIT

NOTICE OF COMMENCEMENT

STATE OF GEORGIA PROMPT PAY ACT AFFIDAVIT

W-9 TAX FORM

PROCUREMENT AND CONTRACTING DOCUMENTS GROUP

(please notice these specifications are per the new CSI Division Section Numbering)

Division	*Section*
DIVISION 00 - PROCUREMENT AND CONTRACTING REQUIREMENTS	
001116	INVITATION TO BID
002113	INSTRUCTIONS TO BIDDERS
003100	AVAILABLE PROJECT INFORMATION
004143	BID FORM – STIPULATED SUM (SINGLE-PRIME CONTRACT)
004300	PROCUREMENT FORM SUPPLEMENTS
005214	AGREEMENT FORM – AIA STIPULATED SUM (SINGLE-PRIME CONTRACT)
007214	GENERAL CONDITIONS – AIA STIPULATED SUM (SINGLE-PRIME CONTRACT)
007313	SUPPLEMENTARY CONDITIONS - AIA

SPECIFICATIONS GROUP

General Requirements Subgroup

DIVISION 01 - GENERAL REQUIREMENTS

011000	SUMMARY
012000	PRICE AND PAYMENT PROCEDURES

012500 SUBSTITUTION PROCEDURES
013000 ADMINISTRATIVE REQUIREMENTS
013216 CONSTRUCTION PROGRESS SCHEDULE
013300 SUBMITTAL PROCEDURES
014000 QUALITY REQUIREMENTS
017000 EXECUTION AND CLOSEOUT REQUIREMENTS

Facility Construction Subgroup

DIVISION 02 - EXISTING CONDITIONS (NOT USED)

DIVISION 03 - CONCRETE

03 35 20 BRUSHED CONCRETE FINISHING

DIVISION 04 - MASONRY

04 20 00 UNIT MASONRY
SUPPLEMENT: BRICK INDUSTRY ASSOCIATION – TECHNICAL NOTES ON BRICK CONSTRUCTION

DIVISION 05 – METAL (NOT USED)

DIVISION 06 - WOOD, PLASTICS, AND COMPOSITES (NOT USED)

DIVISION 07 - THERMAL AND MOISTURE PROTECTION

07 31 13 ASPHALT SHINGLES
07 54 05 SHEET MEMBRANE ROOFING – MECHANICALLY ATTACHED
SUPPLEMENT: DURO-LAST – MECHANICALLY FASTENED SYSTEMS

DIVISION 08 – OPENINGS (NOT USED)

DIVISION 09 - FINISHES

09 30 00 TILE
09 51 23 ACOUSTICAL TILE CEILINGS
09 65 00 RESILIENT FLOORING

DIVISION 10 - SPECIALTIES

10 28 00 TOILET, BATH, AND LAUNDRY ACCESSORIES

Facility Construction Subgroup (continued)

(please notice these specifications are per the old CSI Division Section Numbering)

DIVISION 02 - SITE WORK

02100	SITE PREPARATION
02200	EARTHWORK
	SUPPLEMENT: GEOHYDRO ENGINEERS - REPORT OF SUBSURFACE EXPLORATION AND GEOTECHNICAL ENGINEERING EVALUATION
02282	TERMITE CONTROL
02514	PORTLAND CEMENT AND CONCRETE PAVING
02515	BRICK PAVERS
02660	WATER DISTRIBUTION SYSTEM
02720	STORM SEWERS
02730	SANITARY SEWERS
02810	IRRIGATION SYSTEM
02900	LANDSCAPING

DIVISION 03 – CONCRETE

03310	CONCRETE WORK

DIVISION 04 – MASONRY

04400	CAST STONE

DIVISION 05 – METAL

05120	STRUCTURAL STEEL
05210	STEEL JOISTS
05310	STEEL ROOF DECKING
05500	MISCELLANEOUS STEEL AND METAL FABRICATIONS
05540	METAL STUDS

DIVISION 06 – CARPENTRY

06100	ROUGH CARPENTRY
06192	METAL PLATE CONNECTED WOOD TRUSSES
06200	FINISH CARPENTRY
06220	MILLWORK

DIVISION 07 - THERMAL AND MOISTURE PROTECTION

07115	BITUMINOUS DAMPPROOFING
07200	BATT INSULATION
07410	PREFORMED METAL ROOFING AND INSULATION PANELS
07460	FIBER CEMENT SOFFITS AND TRIM
07600	FLASHING AND SHEET METAL
07900	JOINT SEALERS

DIVISION 08 - DOORS, WINDOWS, AND GLASS

08110 STEEL DOORS AND FRAMES
08211 WOOD DOORS
08410 ALUMINUM ENTRANCES AND STOREFRONTS
08710 FINISH HARDWARE
08800 GLASS AND GLAZING

DIVISION 09 – FINISHES

09250 GYPSUM DRYWALL
09300 QUARRY TILE
09510 ACOUSTICAL CEILINGS
09810 POLISHED CONCRETE FLOORS
09900 PAINTING

DIVISION 10 – SPECIALTIES

10160 TOILET PARTITIONS
10200 LOUVERS
10410 IDENTIFYING DEVICES
10520 FIRE EXTINGUISHERS, CABINETS AND ACCESSORIES

DIVISION 11 – EQUIPMENT

11400 FOOD SERVICE EQUIPMENT

DIVISION 12 - FURNISHINGS (NOT USED)

DIVISION 13 - SPECIAL CONSTRUCTION (NOT USED)

DIVISION 14 - CONVEYING EQUIPMENT (NOT USED)

DIVISION 15 - MECHANICAL (SEE DRAWINGS)

DIVISION 16 - ELECTRICAL

16000 Architectural Criteria For Division 16 Systems
16010 Electrical General Provisions
16100 Basic Materials and Methods
16400 Services and Distribution
16500 Lighting
16720 Fire Alarm

END OF TABLE OF CONTENTS

City of Cedartown, Georgia
Lankford Event Center
Advertisement for Bids (Project No. 15045)

The City of Cedartown, Georgia, is seeking sealed bids for the new construction of the Lankford Event Center as described in the specifications, drawings, and bid documents. The sealed bids will be received by Bill Fann, City Manager, in the Commission Chamber of Cedartown City Hall, 201 East Avenue, Cedartown, Georgia, 30125, until December 14, 2016, at 2:00 P.M. At that time and place the bids will be publicly opened and read aloud. Submit one copy of executed offer on Bid Forms provided, signed and sealed in a closed, opaque envelope, clearly identified with Bidder's name and address, Project name, and Owner's name on the exterior. bid may be withdrawn after the closing time for receipt of proposal for a period of 60 days.

General Scope of Work:
The work to be done consists of furnishing all the labor, tools, equipment, and materials necessary for the new construction of the Lankford Event Center per the drawings and specifications provided.

Requirements and Documents:
Electronic Bidding Documents may be obtained from the City of Cedartown, Georgia, website: http://www.cedartowngeorgia.gov/. It is the responsibility of interested parties to periodically check the website for any new information that may be posted. Printed Bidding Documents may be obtained from Greene's Blueprinting, LLC, located at 169 South Church Street, Canton, Georgia, 30114, and contact information being (770) 479 – 3773 and greeneprinting@greeneprinting.com. The Architect retains ownership and copyrights to all contract documents. All questions should be submitted via e-mail to Audrey Burton, audrey@ceviandesign.com.

Bonds:
Bids must be accompanied by a Bid Bond in the amount of not less than five percent (5%) of the Bid Sum. A Georgia Resident Agent must countersign all bid bonds.

A faithful Performance Bond in the amount of one hundred percent (100%) of the amount of the Bid, and a Labor & Materials Payment Bond in the amount of not less than the amount of said Bid, one hundred percent (100%), as provided by Georgia Code Section 23-1704 and 23-1705, shall be furnished by the successful bidder.

The City of Cedartown, Georgia, reserves the right to reject any or all proposals, to waive informalities, and to re-solicit if deemed necessary.

Bill Fann
City Manager
City of Cedartown, Georgia

Legal Ad / Public Notice

City of Cedartown, Georgia
Certificate of Non-Discrimination

In connection with the performance of work under this contract, the bidder agrees as follows:

The bidder agrees not to discriminate against any employee or applicant for employment because of race, creed, color, sex, national origin, ancestry or disability. The vendor shall take affirmative action to insure that employees are treated without regard to their race, creed, color, sex, national origin, ancestry or disability.

Such action shall include, but not be limited to the following: employment, upgrading, demotion, transfer, recruiting or recruitment, advertising, lay-off or termination, rates of pay or other compensation and selection for training, including apprenticeship.

In the event of the bidder's non-compliance with this non-discrimination clause, the contract may be canceled or terminated by the City of Cedartown. The bidders may be declared, by the City of Cedartown, ineligible for further contracts with the City of Cedartown until satisfactory proof of intent to comply shall be made by the vendor.

The bidder agrees to include this non-discrimination clause in any sub-contracts connected with the performance of this agreement.

_____

BIDDER

_____

SIGNATURE

_____

TITLE

END OF SECTION

City of Cedartown, Georgia
Drug-Free Workplace Certificate

By signature on this certificate, the Bidder certifies that the provisions of O.C.G.A. Section 50-24-1 through 50- 24-6 related to the "Drug-Free Workplace Act" will be complied with in full. The Bidder further certifies that:

1. A drug-free workplace will be provided for the Bidder's employees during the performance of the contract; and

2. Each contractor who hires a subcontractor to work in a drug-free workplace shall secure from that subcontractor the following written certification: "As part of the subcontracting agreement with (contractor's name), (subcontractor's name) certifies to the contractor that a drug-free workplace will be provided for the subcontractor's employees during the performance of this contract pursuant to O.C.G.A. Section 50-24-3(b)(7)."

By signature on this certificate, the Bidder further certifies that it will not engage in the unlawful manufacture, sale, distribution, dispensation, possession, or use of a controlled substance or marijuana during the performance of the contract.

_____
BIDDER

_____
BY

_____
NAME PRINTED

_____
TITLE

_____
DATE

END OF SECTION

City of Cedartown, Georgia
E-Verify Compliance Affidavit

By executing this affidavit, the undersigned contractor verifies its compliance with O.C.G.A. § 13- 10- 91, stating affirmatively that the individual, firm or corporation which is engaged in the physical performance of services on behalf of the City of Cedartown, Georgia, has registered with, is authorized to use and uses the federal work authorization program commonly known as E-Verify, or any subsequent replacement program, in accordance with the applicable provisions and deadlines established in O.C.G.A. § 13-10-91. Furthermore, the undersigned contractor will continue to use the federal work authorization program throughout the contract period and the undersigned contractor will contract for the physical performance of services in satisfaction of such contract only with subcontractors who present an affidavit to the contractor with the information required by O.C.G.A, § 13-10-91 (b). Contractor hereby attests that its federal work authorization user identification number and date of authorization are as follows:

_____

FEDERAL WORK AUTHORIZATION USE IDENTIFICATION NUMBER
(not required if less than 10 employees)

_____

SIGNATURE
(if less than 10 employees)

_____

DATE OF AUTHORIZATION

_____

NAME OF CONTRACTOR / COMPANY

_____

NAME OF PROJECT

_____

NAME OF PUBLIC EMPLOYER

(continued next page)

City of Cedartown, Georgia
E-Verify Compliance Affidavit (continued)

I hereby declare under penalty of perjury that the foregoing is true and correct.

Executed on_____,_____, 20_____, in_____, (city)_____(state).

_____
SIGNATURE OF AUTHORIZED OFFICER OR AGENT

_____
PRINTED NAME AND TITLE OF AUTHORIZED OFFICER OR AGENT

Subscribed and sworn before me on this the _____ day of_____, 20_____.

_____
NOTARY PUBLIC

_____
NOTARY PUBLIC COMMISSION EXPIRATION DATE

END OF SECTION

City of Cedartown, Georgia
Non-Collusion Affidavit

The following affidavit is to accompany the bid:

_____
STATE

_____
COUNTY

_____
OWNER, PARTNER, OR OFFICER OF FIRM / COMPANY

_____
NAME, ADDRESS, CITY, AND STATE

Being of lawful age, being first duly sworn, on oath says that he/she is the agent authorized by the bidder to submit the attached bid. Affidavit further states as bidder, that they have not been a party to any collusion among bidders in restraint of competition by agreement to bid at a fixed price or to refrain from bidding; or with any office of the City of Cedartown or any of their employees as to quantity, quality or price in the prospective contract; or any discussion between bidders and any official of the City of Cedartown or any of their employees concerning exchange of money or other things of value for special consideration in submitting a sealed bid for:

_____
FIRM NAME

_____
SIGNATURE

_____
TITLE

Subscribed and sworn before me on this the _____ day of_____, 20_____.

_____
NOTARY PUBLIC

_____
STATE OF GEORGIA, COUNTY

END OF SECTION

City of Cedartown, Georgia
Notice of Commencement

TO: CLERK OF SUPERIOR COURT OF_____COUNTY, GEORGIA

Pursuant to O.C.G.A. § 13-10-62(a), not later than fifteen (15) days after physically commencing work on the property, the undersigned gives Notice of Commencement of improvements to property including the following information:

1. The Name, Address, and Telephone of General Contractor;

   _____

   _____

   _____

2. The Name and Location of Public Work to be Constructed, or General Description of the Improvement;

   _____

   _____

   _____

3. The Name and Address o the State or the Agency or Authority of the State that is Contracting for the Public Works Construction;

   _____

   _____

   _____

4. The Name and Address of the Surety for the Performance and Payment Bonds, if any; and

   _____

   _____

   _____

City of Cedartown, Georgia
Notice of Commencement (continued)

5. The Name and Address of the Holder of the Security Deposit Provided, if any.

_____

_____

_____

_____
CONTRACTOR

_____
BY

_____
NAME

_____
TITLE

THIS DOCUMENT MUST BE FILED WITH THE CLERK OF THE SUPERIOR COURT FOR THE COUNTY IN WHICH THE PROJECT IS LOCATED AND A COPY OF THIS DOCUMENT MUST BE POSTED AT THE PROJECT SITE NOT LATER THAN FIFTEEN (15) DAYS AFTER T HE CONTRACTOR PHYSICALLY COMMENCES WORK ON THE PROPERTY.

WITHIN TEN (10) CALENDAR DAYS OF THE RECEIPT OF A WRITTEN REQUEST, GIVE A COPY OF THIS NOTICE OF COMMENCEMENT TO ANY SUBCONTRACTOR, MATERIAL MAN, OR PERSON MAKING THE REQUEST.

END OF SECTION

City of Cedartown, Georgia
State of Georgia Prompt Pay Act Affidavit

THIS AFFIDAVIT IS TO ACCOMPANY THE BID

GEORGIA PROMPT PAY ACT: The Georgia Prompt Pay Act was enacted by the General Assembly in 1994 and took effect January 1, 1995. This act requires owners to pay contractors within 15 days of receipt of a pay request by the owner or the owner's representative. If payment is not made the owner shall pay the contractor 1% per month interest on the delayed payment. Additionally, the contractor must pay subcontractors within 15 days of receipt of payment from the owner.

This Act is Code Section 13-11-1 (Georgia Laws of 1994, p. 1398 par. 4)

_____
FIRM NAME

_____
SIGNATURE

_____
TITLE

Subscribed and sworn before me on this the _____ day of_____, 20_____.

_____
NOTARY PUBLIC

_____
STATE OF GEORGIA, COUNTY

END OF SECTION

SECTION 00 11 16 - INVITATION TO BID

Project: Lankford Event Center

Owner: City of Cedartown, Georgia
201 East Avenue
Cedartown, Georgia 30125

Architect: CEVIAN Design Lab, LLC
202 Broad Street, Suite 200
Rome, Georgia 30161

Date: November 14, 2016

Your firm is invited to submit a sealed Bid to the City of Cedartown, Georgia, for the new construction of the Lankford Event Center located at 601 South Main Street, Cedartown, Georgia, 30125. The Owner will receive Bids at the Commission Chamber located at Cedartown City Hall, 201 East Avenue, Cedartown, Georgia, 30125, until 2:00 P.M. local time on the 14th day of December, 2016, at which time and place the Bids will be publicly opened and read aloud. Bids not received by the indicated time will not be opened. Submit one copy of executed offer on Bid Forms provided, signed and sealed in a closed, opaque envelope, clearly identified with Bidder's name and address, Project name, and Owner's name on the exterior.

Project Description: The work to be done consists of furnishing all the labor, tools, equipment, and materials necessary for the new construction of the Lankford Event Center per the drawings and specifications provided. The Owner has previously completed demolition of all existing structures on the site. Construction of a new brick facility, a new outdoor pavilion, and site work and landscaping are included in the scope of work. Installation of curb, gutter, and sidewalk along the adjacent roadways is *not* included in the scope of work. Site preparation *for* and installation *of* the asphalt parking lot is also *not* included in the scope of work.

Bidder shall insert Project completion time in the space provided on the Bid Form.

Bidding Documents for a Stipulated Price contract may be obtained electronically from the City of Cedartown, Georgia, website: http://www.cedartowngeorgia.gov/. Printed copies of the Bidding Documents for a Stipulated Price contract may be obtained from Greene's Blueprinting, LLC, located at 169 South Church Street, Canton, Georgia, 30114, and contact information being (770) 479 – 3773 and greeneprinting@greeneprinting.com. Bidding Documents can only be obtained as a complete set. Bidding Documents can only be obtained by General Contract and Subcontract Bidders.

Bidders will be required to provide Bid security according to the requirements in Document 00 21 13 - Instructions to Bidders and Document 00 31 00 - Available Project Information. Refer to other Bidding requirements described in Document 00 21 13 - Instructions to Bidders and Document 00 31 00 - Available Project Information.

Submit your Bid on the Bid Form provided.

Your Bid will be required to be submitted under a condition of irrevocability for a period of 60 days after submission.

The Owner reserves the right to reject any or all proposals, to waive informalities, and to re-solicit if deemed necessary.

City of Cedartown, Georgia
Per: Bill Fann, City Manager

END OF DOCUMENT

SECTION 00 21 13 - INSTRUCTIONS TO BIDDERS

1.1 SUMMARY

A. Document Includes:
1. Bid submission.
2. Intent.
3. Work identified in Contract Documents.
4. Contract Time.
5. Definitions.
6. Contract Documents identification.
7. Availability of documents.
8. Examination of documents.
9. Inquiries and Addenda.
10. Product substitutions.
11. Site examination.
12. Bidder qualifications.
13. Bidder prequalification.
14. Subcontractors.
15. Submission procedure.
16. Bid ineligibility.
17. Bid Security.
18. Consent of surety or Agreement to bond.
19. Performance Assurance.
20. Bid Form requirements.
21. Fees for changes in the Work.
22. Bid Form signature.
23. Additional Bid information.
24. Selection and award of alternates.
25. Bid opening.
26. Duration of offer.
27. Acceptance of offer.

B. Related Documents:
1. Document 00 11 16 - Invitation to Bid.
2. Document 00 31 00 - Available Project Information.
3. Document 00 41 13 - Bid Form - Stipulated Sum (Single-Prime Contract)
4. Document 00 43 00 - Procurement Form Supplements: Appendices A to C.
5. Document 00 52 14 - Agreement Form - AIA Stipulated Sum (Single-Prime Contract)
6. Document 00 72 14 - General Conditions - AIA Stipulated Sum (Single-Prime Contract)
7. Document 00 73 13 - Supplementary Conditions – AIA:
   a. Basic Definitions.
   b. Correlation and Intent of the Contract Document.
   c. Taxes.
   d. Construction Change Directives
   e. Time
   f. Applications for Payment
   g. Performance Bond and Payment Bond.
8. Section 01 10 00 - Summary.
9. Section 01 20 00 - Price and Payment Procedures.
10. Section 01 60 00 - Product Requirements.

1.2 BID SUBMISSION

A. Bids signed and sealed, executed, and dated will be received by the Owner at the Commission Chamber located at Cedartown City Hall, 201 East Avenue, Cedartown, Georgia, 30125, until 2:00

P.M. local time on the 14th day of December, 2016, at which time and place the Bids will be publicly opened and read aloud.

B. Bids submitted after the above time will be returned to Bidder unopened.

C. Amendments to submitted Bids will be permitted when received in writing prior to Bid closing and when endorsed by the same party or parties who signed and sealed the Bid.

D. Bidders may withdraw their Bid by written request before the above time.

1.3 INTENT

A. The intent of this Bid request is to obtain an offer to perform work to complete the new construction of the Lankford Event Center located at 601 South Main Street, Cedartown, Georgia, 30125, for a Stipulated Sum contract, according to Contract Documents.

1.4 WORK IDENTIFIED IN CONTRACT DOCUMENTS

A. Work of this proposed Contract comprises general construction and site development, including civil, landscape, structural, architectural, mechanical, plumbing, and electrical work.

B. Location: Lankford Event Center located at 601 South Main Street, Cedartown, Georgia, 30125.

1.5 CONTRACT TIME

A. Identify Contract Time in Bid Form. Completion date in Agreement shall be Contract Time added to commencement date.

B. Owner requires Work of this Contract be completed as soon as possible. Consideration will be given to time of completion when reviewing submitted Bids.

1.6 DEFINITIONS

A. Bidding Documents: Contract Documents supplemented with Advertisement for Bids, Invitation to Bid, Instructions to Bidders, Information Available to Bidders, Bid Form, Bid Form Supplements and Appendices, and Bid securities.

B. Contract Documents: Defined in AIA A201 - General Conditions of the Contract for Construction, Article 1, including issued Addenda.

C. Bid: Executed Bid Form and required attachments submitted according to Instructions to Bidders.

D. Bid Sum: Monetary sum identified by the Bidder in the Bid Form.

1.7 CONTRACT DOCUMENTS IDENTIFICATION

A. Contract Documents are identified as Lankford Event Center, project number 15045 as prepared by the Architect, CEVIAN Design Lab, LLC, located at 202 Broad Street, Suite 200, Rome, Georgia, 30161, and identified in the Project Manual.

1.8 AVAILABILITY OF DOCUMENTS

A. Bidding Documents may be obtained as stated in the Advertisement for Bids and/or the Invitation to Bid.

B. Partial sets of Bidding Documents will not be issued.

C. Bidding Documents are made available only for the purpose of obtaining offers for this Project. Their use does not grant a license for other purposes. The Architect retains ownership and copyrights to all contract documents.

1.9 EXAMINATION OF DOCUMENTS

A. Bidding Documents may be viewed at the office of the Owner.

B. Upon receipt of Bidding Documents verify that documents are complete. Notify Architect/Engineer if documents are incomplete.

C. Immediately notify Architect/Engineer upon finding discrepancies or omissions in Bidding Documents.

1.10 INQUIRIES AND ADDENDA

A. All questions should be submitted via e-mail to Audrey Burton, audrey@ceviandesign.com.

B. Verbal answers are not binding on any party.

C. Submit questions not less than seven days before date set for receipt of Bids. Replies will be made by Addenda, which may be issued during Bidding period. Addenda will be posted to the City of Cedartown, Georgia, website: http://www.cedartowngeorgia.gov/. Addenda will also be sent to known Bidders. Addenda become part of Contract Documents. Include resultant costs in the Bid Sum.

1.11 PRODUCT SUBSTITUTIONS

A. Where Bidding Documents stipulate particular products, substitution requests will be considered by Architect up to 10 days before receipt of Bids.

B. With each substitution request, provide sufficient information for Architect to determine acceptability of proposed products. Comply with substitution request submittal requirements in Section 01 60 00 - Product Requirements including the use of the Substitution Request Form.

C. When a request to substitute a product is made, Architect may approve the substitution. Approved substitutions will be identified by Addenda.

D. In submission of substitutions to products specified, Bidders shall include in their Bid changes required in the Work, changes to Contract Time, and changes to Contract Sum to accommodate such approved substitutions. Later claims by the Bidder for an addition to the Contract Time or Contract Sum because of changes in Work necessitated by use of substitutions will not be considered.

1.12 SITE EXAMINATION

A. Examine Project Site before submitting a Bid.

B. Contact Owner at the following address and phone number to arrange date and time to visit Project Site:
   1. Address: 201 East Avenue, Cedartown, Georgia, 30125
   2. Telephone: (770) 748 - 3220

1.13 BIDDER QUALIFICATIONS

A. To demonstrate qualification for performing the Work of this Contract, Bidders may be requested to submit written evidence of financial position, previous experience, current commitments, and license to perform work in the State of Georgia.

1.14 SUBCONTRACTORS

A. Owner reserves the right to reject a proposed Subcontractor for reasonable cause.

B. Refer to AIA A201- General Conditions of the Contract for Construction, Article 5.

1.15 SUBMISSION PROCEDURE

A. Bidders shall be solely responsible for delivery of Bids in manner and time prescribed.

B. Submit one copy of executed offer on Bid Forms provided, signed and sealed in a closed, opaque envelope, clearly identified with Bidder's name and address, Project name, and Owner's name on the exterior.

1.16 BID INELIGIBILITY

A. Bids that are unsigned, improperly signed or sealed, conditional, illegible, and obscure, or Bids that contain arithmetical errors, erasures, alterations, or irregularities of any kind, will be declared unacceptable at Owner's discretion.

B. Bid Forms, Appendices, and enclosures that are improperly prepared will be declared unacceptable at Owner's discretion.

C. Failure to provide security deposit, bonds, or insurance requirements will invalidate the Bid at Owner's discretion.

1.17 BID SECURITY

A. Bids shall be accompanied by Bid security as follows:
   1. Bid bond of a sum no less than 5 percent of the Bid Sum on standard surety company form.

B. Endorse Bid bond in name of the Owner as obligee, signed, and sealed by the principal (Contractor) and surety.

C. Bid securities will be returned after delivery to the Owner of required performance bond and payment bond by the accepted Bidder.

D. If the accepted Bidder fails to execute the Agreement and the indicated bonds within 10 days after the Notice of Award, the Notice of Award may be annulled and the Bid security of the Bidder will be forfeited.

E. Include the cost of Bid security in the Bid Sum.

F. After a Bid has been accepted, Bid security will be returned to the respective Bidders.

G. If no contract is awarded, Bid security will be returned.

1.18 CONSENT OF SURETY OR AGREEMENT TO BOND

A. Submit with the Bid.

1.19 PERFORMANCE ASSURANCE

A. Accepted Bidder: Provide a performance bond and payment bond as described in Document 00 73 13 - Supplementary Conditions – AIA.

B. Include the cost of performance assurance bonds in the Bid Sum and identify the cost when requested by Owner.

1.20 BID FORM REQUIREMENTS

A. Complete requested information in the Bid Form and Bid Form Supplements.

B. Refer to Document 00 73 13 - Supplementary Conditions – AIA for inclusion of taxes.

1.21 FEES FOR CHANGES IN THE WORK

A. Include in the Bid Form the overhead and profit fees on Bidder's own Work and Work by Subcontractors, applicable for changes in the Work, whether additions to or deductions from the Work on which the Bid Sum is based.

B. Include in the Bid Form fees proposed for Subcontract work for changes (both additions and deductions) in the Work. The Contractor shall apply fees, as noted, to Subcontractor's gross (net plus fee) costs on additional Work.

1.22 BID FORM SIGNATURE

A. Sign Bid Form as follows:
   1. Sole Proprietorship: Signature of sole proprietor in the presence of a witness who will also sign. Include the words "Sole Proprietor" under the signature. Affix seal.
   2. Partnership: Signature of all partners in the presence of a witness who will also sign. Include the word "Partner" under each signature. Affix seal to each signature.
   3. Corporation: Signature of at least one duly authorized signing officer. Include the officer's capacity under each signature. Affix the corporate seal. If Bid is signed by officials other than the president, secretary, or treasurer of the company, submit a copy of the bylaws or a resolution of the board of directors authorizing them to do so, with the Bid Form in the Bid envelope.
   4. Joint Venture: Signature of all parties of the joint venture under their respective seals in a manner appropriate to such party as described above, similar to requirements for Partnerships.

1.23 ADDITIONAL BID INFORMATION

A. Complete and submit Document 00 43 00 - Procurement Form Supplements: Appendices A to C with Bid.

1.24 SELECTION AND AWARD OF ALTERNATES

A. Submit variation of Bid Sum for alternates listed in Document 00 43 00 - Procurement Form Supplements. Calculate change in Bid Sum by adding to or deducting from base Bid Sum.

B. Bids will be evaluated on total of base Bid Sum with full consideration of alternates.

1.25 BID OPENING

A. Bids will be opened publicly immediately after time for receipt of Bids. Bidders may be present.

B. Sealed bids will be received by Bill Fann, City Manager, in the Commission Chamber of Cedartown City Hall, 201 East Avenue, Cedartown, Georgia, 30125, until December 14, 2016, at 2:00 P.M.

1.26 DURATION OF OFFER

A. Bids shall remain open to acceptance and shall be irrevocable for a period of 60 days after Bid closing date.

1.27 ACCEPTANCE OF OFFER

A. The Owner reserves the right to reject any or all proposals, to waive informalities, and to re-solicit if deemed necessary

B. After acceptance by Owner, Architect, on behalf of Owner, will issue to the accepted Bidder a written Bid acceptance.

C. Notwithstanding delay in the preparation and execution of the Agreement, accepted Bidder shall be prepared, upon written Notice to Proceed, to commence work within seven days following receipt of official written order of Owner to proceed, or on date stipulated in such order.

D. The accepted Bidder shall assist and cooperate with Owner to prepare Agreement and shall execute Agreement and return it to Owner within seven days following its presentation.

END OF DOCUMENT

SECTION 00 31 00 - AVAILABLE PROJECT INFORMATION

1.1 SUMMARY

A. Document Includes:
   1. Subsurface investigation report.

B. Available Project information has been furnished by Owner to Architect for use in designing this Project.
   1. Each Bidder shall be fully familiar with available Project information, which has been prepared for Owner by separate consultants.
   2. Available Project information is offered solely for reference and shall not be considered part of Contract Documents. Data contained in Documents prepared by Owner's separate consultants is believed to be reliable; however, Owner and Architect/Engineer do not guarantee their accuracy or completeness.
   3. In preparing their Bids, Bidders shall consider and evaluate data contained in available Project information as well as Contract Documents prepared by Architect/Engineer.

1.2 SUBSURFACE INVESTIGATION REPORT

A. A copy of a geotechnical report is included as an attachment to this Document, titled Report of Subsurface Exploration and Geotechnical Engineering Evaluation for the Cedartown Event Center, dated the 24th of November, 2015, and prepared by GeoHydro Engineers.

B. The report identifies properties of below-grade conditions and offers recommendations for design of foundations, prepared primarily for use of Architect.

C. Recommendations described are not requirements of the Contract unless specifically referenced in Contract Documents.

D. The report, by its nature, cannot reveal all conditions existing on the Site. Should subsurface conditions be found to vary substantially from this report, changes in design and construction of foundations will be made, with resulting changes to Contract Sum and/or Contract Time.

END OF DOCUMENT

SECTION 00 41 13 - BID FORM - STIPULATED SUM (SINGLE-PRIME CONTRACT)

To: The City of Cedartown, Georgia

c/o: Bill Fann, City Manager

Project Name: Lankford Event Center

Project Number: 15045

Date: .....

Submitted by: .....
(full name)

.....
(address)

.....
(address)

1.1 OFFER

Having examined the Place of the Work and all matters referred to in the Instructions to Bidders and the Contract Documents prepared by the Architect for the above-referenced Project, we, the undersigned, hereby offer to enter into a Contract to perform the Work for the Sum of:

.....dollars ($.....), in lawful money of the United States of America.

We have included the Bid security as required by the Instructions to Bidders.

All applicable federal taxes are included in the Bid Sum. And all State of Georgia, City of Cedartown taxes are included in the Bid Sum.

All Cash Allowance and Contingency described in Section 01 20 00 - Price and Payment Procedures are included in the Bid Sum.

1.2 ACCEPTANCE

This offer shall be open to acceptance and is irrevocable for 60 days from the Bid closing date.

If this Bid is accepted by the Owner within the time period stated above, we will:
- Execute the Agreement within seven days of receipt of Notice of Award.
- Furnish the required bonds within seven days of receipt of Notice of Award in the form described in Supplementary Conditions.
- Commence Work within seven days after written Notice to Proceed.

If this Bid is accepted within the time stated, and we fail to commence the Work or we fail to provide the required bonds, the Bid security shall be forfeited as damages to the Owner by reason of our failure, limited in amount to the lesser of the face value of the Bid security or the difference between this Bid and the Bid upon which a Contract is signed.

In the event our Bid is not accepted within the time stated above, the required Bid security will be returned to the undersigned, according to the provisions of the Instructions to Bidders, unless a mutually satisfactory arrangement is made for its retention and validity for an extended period of time.

1.3 CONTRACT TIME

If this Bid is accepted, we will:
- Complete the Work in .....(.....) calendar weeks from Notice to Proceed.

1.4 CHANGES TO THE WORK

When the Architect establishes that the method of valuation for changes in the Work will be net cost plus a percentage fee according to General Conditions, our percentage fee shall be:

.....% (percent) overhead and profit on the net cost of our own Work;

.....% (percent) on the gross cost of work done by any Subcontractor.

On Work deleted from the Contract, our credit to the Owner shall be the Architect approved net cost plus .....% (percent) of the overhead and profit percentage noted above.

1.5 ADDENDA

The following Addenda have been received. The modifications to the Bid Documents noted below have been considered and all costs are included in the Bid Sum.

Addendum No. ..... Dated .....

Addendum No. ..... Dated .....

Addendum No. ..... Dated .....

Addendum No. ..... Dated .....

1.6 APPENDICES

A. The following documents are attached to and made a condition of the Bid:
Bid security in form of:

.....

Document 00 43 00 - Procurement Form Supplements including
Appendix A - List of Subcontractors
Appendix B - List of Unit Prices
Appendix C - List of Alternates

1.7 BID FORM SIGNATURES

The Corporate Seal of…

.....
(Bidder - Print the full name of your firm)

…was hereunto affixed in the presence of…

.....
(Authorized signing officer and title)

(Seal)

.....
(Authorized signing officer and title)

(Seal)

If the Bid is a joint venture or partnership, add additional forms of execution for each member of the joint venture in the appropriate form or forms as above.

END OF DOCUMENT

SECTION 00 43 00 - PROCUREMENT FORM SUPPLEMENTS

To: The City of Cedartown, Georgia

c/o: Bill Fann, City Manager

Project Name: Lankford Event Center

Project Number: 15045

Date: .....

Submitted by: .....
(full name)

.....
(address)

.....
(address)

According to Document 00 21 13 - Instructions to Bidders and Document 00 41 13- Bid Form - Stipulated Sum (Single-Prime Contract), we include the Appendices to Bid Form Supplements listed below. The information provided shall be considered an integral part of the Bid Form.

The following Appendices are attached to this Document:

Appendix A - List of Subcontractors: Include names of major Subcontractors and portions of the Work each Subcontractor will perform.
Appendix B - List of Unit Prices: Include list of Unit Prices specifically requested.
Appendix C - List of Alternates: Include cost variation to Bid Sum applicable to the Work described in Section 01 20 00 - Price and Payment Procedures.

BID FORM SUPPLEMENT SIGNATURES

The Corporate Seal of…

.....
(Bidder - Print the full name of your firm)

…was hereunto affixed in the presence of…

.....
(Authorized signing officer and title)

(Seal)

.....
(Authorized signing officer and title)

(Seal)

If the Bid is a joint venture or partnership, add additional forms of execution for each member of the joint venture in the appropriate form or forms as above.

APPENDIX A - LIST OF SUBCONTRACTORS
The list of Subcontractors submitted below is an integral part of the Bid Form and is referenced in the Bid submitted by…

.....
(Bidder - Print the full name of your firm)

…to…

.....
(Owner - Print the full name of your firm)

…and dated…

.....
(Date)

The following work will be performed (or provided) by Subcontractors and coordinated by us:

Site Work ……

Landscape / Irrigation ……

Concrete ……

Cast Stone ……

Unit Masonry ……

Structural Steel, Joists, and Decking .....

Metal Fabrications .....

Rough Carpentry .....

Finish Carpentry .....

Millwork .....

Roofing .....

Doors and Frames .....

Windows / Storefront Systems .....

Finish Hardware .....

Gypsum Board Assemblies .....

Tiling .....

Acoustical Tile Ceilings .....

Painting and Coating .....

Signage .....

Toilet Partitions .....

Toilet Accessories .....

Fire Protection .....

Mechanical .....

Plumbing .....

Electrical .....

Any Other .....

.....

.....

.....

.....

APPENDIX B - LIST OF UNIT PRICES
The following list of Unit Prices is an integral part of the Bid Form and is referenced in the Bid submitted by

.....
(Bidder - Print the full name of your firm)

…to…

.....
(Owner - Print the full name of your firm)

…and dated…

.....
(Date)

The following Unit Prices are for specific portions of the Work as listed and are applicable to authorized variations from the Contract Documents:

ITEM* **(*per basis of design)**	**PER UNIT COST**	**TOTAL UNIT COST**
Brick Masonry at Event Center	$……	$……..
Brick Masonry at Covered Pavilion	$……	$……..
Brick Masonry at Site Walls	$……	$……..
Cast Stone Elements throughout Project	$……	$……..
Broom Finished Concrete at Event Center	$……	$……..
Broom Finished Concrete throughout Site	$……	$……..
Polished Concrete at Event Center Interior	$……	$……..

Sealed Concrete at Event Center Interior	$……	$……..
Quarry Tile at Event Center Interior	$……	$……..
Porcelain Tile at Event Center Interior	$……	$……..
Zeon Zoysia at Pavilion Lawn	$……	$……..
Zeon Zoysia at Parking Islands and Sidewalks	$……	$……..

ITEM* **(*per alternate request)**	**PER UNIT COST**	**TOTAL UNIT COST**
Brick Masonry at Event Center	$……	$……..
Brick Masonry at Covered Pavilion	$……	$……..
Brick Masonry at Site Walls	$……	$……..
Stamped Concrete at Event Center	$……	$……..
Stamped Concrete throughout Site	$……	$……..
Brick Pavers throughout Site	$……	$……..

APPENDIX C - LIST OF ALTERNATES
The following list of alternates is an integral part of the Bid Form and is referenced in the Bid submitted by

.....
(Bidder - Print the full name of your firm)

…to…

.....
(Owner - Print the full name of your firm)

…and dated…

.....
(Date)

The following amounts shall be added to or deducted from the Bid Sum. Refer to Schedule of Alternates in Section 01 20 00 - Price and Payment Procedures for description of alternates. Drawings and specifications associated with alternates can be found in the Project Manual and Construction Documents.

No.	**ADD / DEDUCT**	**TOTAL COST**
EVENT CENTER ROOF – Basis of Design: Duro-Last Single Ply Roofing Membrane		
No. 1 – Metal Roof	…….	$……..
COVERED PAVILION ROOF – Basis of Design: Architectural Asphalt Shingle		
No. 2 – Metal Roof	…….	$……..
STAMPED CONCRETE AT EVENT CENTER – Basis of Design: Broom Finished Concrete		
No. 3 – Stamped Concrete	…….	$……..
STAMPED CONCRETE THROUGHOUT SITE – Basis of Design: Broom Finished Concrete		
No. 4 – Stamped Concrete	…….	$……..
BRICK PAVERS THROUGHOUT SITE – Basis of Design: Broom Finish Concrete		

No. 5 – Brick Pavers ……. $……..

IRRIGATION AT PAVILION LAWN – Basis of Design: Not in Scope of Work

No. 6 – Irrigation ……. $……..

SPRINKLER VAULT AND CORRESPONDING PIPING TO EVENT CENTER – Basis of Design: Not in Scope of Work

No. 7 – Sprinkler Vault and Piping ……. $……..

BRICK MASONRY THROUGHOUT PROJECT (GENERAL SHALE: PRESERVATION RED) – Basis of Design: General Shale: Millbrook

No. 8 – Brick Masonry ……. $……..

END OF DOCUMENT

SECTION 00 52 14 - AGREEMENT FORM - AIA STIPULATED SUM (SINGLE-PRIME CONTRACT)

1.1 AGREEMENT

A. AIA A101 - Standard Form of Agreement between Owner and Contractor Where the Basis of Payment Is a Stipulated Sum forms the basis of Agreement between the Owner and Contractor.

END OF DOCUMENT

SECTION 00 72 14 - GENERAL CONDITIONS - AIA STIPULATED SUM (SINGLE-PRIME CONTRACT)

1.1 GENERAL CONDITIONS

A. AIA A201 - General Conditions of the Contract for Construction is the General Conditions of the Contract.

1.2 SUPPLEMENTARY CONDITIONS

A. Refer to Document 00 73 13 - Supplementary Conditions - AIA for modifications to General Conditions.

END OF DOCUMENT

SECTION 00 73 13 - SUPPLEMENTARY CONDITIONS – AIA

1.1 SUPPLEMENTARY CONDITIONS

A. These Supplementary Conditions modify AIA A201 - General Conditions of the Contract for Construction and other provisions of the Contract Documents as indicated below. All provisions not modified remain in full force.

ARTICLE 1 - GENERAL PROVISIONS

1.1 - BASIC DEFINITIONS

1.1.8	Products: New material, machinery, components, equipment, fixtures, and systems forming the Work, not including machinery and equipment used for preparation, fabrication, conveying, and erection of the Work. Products may also include existing materials or components required for reuse.
1.1.9	Furnish: To supply, deliver, unload, and inspect for damage.
1.1.10	Install: To unpack, assemble, erect, apply, place, finish, cure, protect, clean, and make ready for use.
1.1.11	Provide: To furnish and install.

1.2 - CORRELATION AND INTENT OF THE CONTRACT DOCUMENT

1.2.4	Sections of Division 01 govern the execution of the Work of all Sections of the Specifications.

ARTICLE 3 – CONTRACTOR

3.6 – TAXES

3.6.2	Owner will obtain an exemption certificate for Contractor for taxes on certain products or items, for purchasing products or items for the Work.

ARTICLE 7 - CHANGES IN THE WORK

7.3 - CONSTRUCTION CHANGE DIRECTIVES

7.1.4	The Agreement identifies the overhead and profit fees applicable to changes in the Work, whether additions to or deductions from the Work on which the Contract Sum is based, and it identifies the fees for subcontract work for changes (both additions and deductions) in the Work. Contractor shall apply fees, as noted, to Subcontractor's gross (net plus fee) costs on additional work.

ARTICLE 8 - TIME

8.1.5	Contract Time is identified in Document 00 21 13 - Instruction to Bidders, Document 00 41 13 - Bid Form - Stipulated Sum (Single-Prime Contract).

ARTICLE 9 - PAYMENTS AND COMPLETION

9.3 - APPLICATIONS FOR PAYMENT
Add the following Subparagraph to Subparagraph 9.3.1:

9.3.1.3	Until Substantial Completion, Owner shall pay 90% percent of the amount due Contractor on account of progress payments.

Add the following Paragraph and Subparagraph:

9.11	Liquidated Damages
9.11.1	Liquidated damages in the amount of $300 per calendar day shall accrue to Owner for late completion of the Work.
9.11.2	

ARTICLE 11 - INSURANCE AND BONDS

11.5 - PERFORMANCE BOND AND PAYMENT BOND

Add the following Subparagraphs:

11.5.3	Contractor shall furnish bonds to Owner in the following amounts:
11.5.3.1	Furnish a 100 percent performance bond on a standard surety bond form.
11.5.3.2	Furnish a 100 percent payment bond on standard surety bond form.

END OF DOCUMENT

SECTION 01 10 00 - SUMMARY

PART 1 GENERAL

1.1 SUMMARY

A. Section Includes:
1. Contract description.
2. Work by Owner or Others.
3. Owner-Furnished Products.
4. Contractor's Use of Site and Premises.
5. Future work.
6. Permits.
7. Specification Conventions.

1.2 CONTRACT DESCRIPTION

A. Work of the Project includes new construction of the Lankford Event Center.

B. Perform Work of Contract under stipulated sum Contract with Owner according to Conditions of Contract.

1.3 WORK BY OWNER OR OTHERS

A. Owner has not currently awarded contracts for Work interfacing with this Contract, however, the Owner intends to perform some of work separately.

B. If Owner-awarded contracts interfere with each other due to work being performed at the same time or at the same Site, Owner will determine the sequence of work under all contracts according to "Work Sequence" and "Contractor's Use of Site and Premises" Articles in this Section.

C. Work done by others includes:
1. Existing Structure Demolition: Owner has completed structure demolition on Site.
2. Installation of Sidewalks, Curb, and Gutter: Owner intends to complete this work separately.
3. Installation of Asphalt Parking Lot: Owner intends to complete this work separately.

D. Items noted NIC (Not in Contract), including the Commercial Kitchen Appliances will be furnished by Owner, and installed by Contractor prior to Substantial Completion.

1.4 OWNER-FURNISHED PRODUCTS

A. Owner's Responsibilities:
1. Arrange for and deliver Owner-reviewed Shop Drawings, Product Data, and Samples to Contractor.
2. Arrange and pay for delivery to Site.
3. Upon delivery, inspect products jointly with Contractor.
4. Submit claims for transportation damage and replace damaged, defective, or deficient items.
5. Arrange for manufacturers' warranties, inspections, and service.

B. Contractor's Responsibilities:
1. Review Owner-reviewed Shop Drawings, Product Data, and Samples.
2. Receive and unload products at Site; inspect for completeness or damage jointly with Owner.
3. Handle, store, install, and finish products.
4. Repair or replace items damaged after receipt.

C. Items furnished by Owner for installation by Contractor:
   1. Dual Temperature Reach-in Refrigerator / Freezer.
   2. Heated Banquet Cabinet.
   3. Ice Machine.
   4. Coffee Brewer.
   5. Tea Brewer.

1.5 CONTRACTOR'S USE OF SITE AND PREMISES

A. Limit use of Site and premises to allow:
   1. Work by Owner.
   2. Work by Others.

B. Construction Operations: Limited to property boundaries.

C. Construction Plan: Before start of construction, submit an electronic copy of the construction plan, to the Owner, Bill Fann, at bfann@cedartowngeorgia.gov, and the Architect, Audrey Burton, at audrey@ceviandesign.com, regarding access to Work, use of Site, and utility outages for acceptance by Owner. After acceptance of plan, construction operations shall comply with accepted plan unless deviations are accepted by the Owner in writing.

1.6 WORK SEQUENCE

A. Construct Work in order to accommodate Owner's installation of sidewalk, curb, gutter, and asphalt parking lot during construction period. Coordinate construction schedule and operations with Architect and Owner

B. Sequencing of Construction Plan: Before start of construction submit an electronic copy of the construction plan, to the Owner, Bill Fann, at bfann@cedartowngeorgia.gov, and the Architect, Audrey Burton, at audrey@ceviandesign.com, of the construction plan regarding phasing of new construction for acceptance by Owner. After acceptance of plan, construction sequencing shall comply with accepted plan unless deviations are accepted by Owner in writing.

1.7 PERMITS

A. Furnish all necessary permits for construction of Work including, but not limited to the following:
   1. Building permit.
   2. Stormwater permit.

1.8 SPECIFICATION CONVENTIONS

A. These Specifications are written in imperative mood and streamlined form. This imperative language is directed to Contractor unless specifically noted otherwise. The words "shall be" are included by inference where a colon (:) is used within sentences or phrases.

PART 2 PRODUCTS - Not Used

PART 3 EXECUTION - Not Used

END OF SECTION

SECTION 01 20 00 - PRICE AND PAYMENT PROCEDURES

PART 1 GENERAL

1.1 SECTION INCLUDES

A. Cash allowances.

B. Contingency.

C. Testing and inspection allowances.

D. Schedule of Values.

E. Application for Payment.

F. Change procedures.

G. Defect assessment.

H. Unit prices.

I. Alternates.

1.2 CASH ALLOWANCES

A. Costs Included in Cash Allowances: Cost of product to Contractor or Subcontractor, less applicable trade discounts; delivery to Site and applicable taxes unless stated otherwise in Allowance Schedule.

B. Costs Not Included in Cash Allowances but Included in Contract Sum: Product handling at Site including unloading, uncrating, and storage; protection of products from elements and from damage; and labor for installation and finishing unless stated otherwise in Allowance Schedule.

C. Architect Responsibilities:
   1. Consult with Contractor for consideration and selection of products and suppliers.
   2. Select products in consultation with Owner and transmit decision to Contractor.
   3. Prepare Change Order.

D. Contractor Responsibilities:
   1. Assist Architect in selection of products and suppliers.
   2. Obtain proposals from suppliers and installers and offer recommendations.
   3. Upon notification of selection by Architect, execute purchase agreement with designated supplier and installer.
   4. Arrange for and process Shop Drawings, Product Data, and Samples. Arrange for delivery.
   5. Promptly inspect products upon delivery for completeness, damage, and defects. Submit claims for transportation damage.

E. Differences in costs will be adjusted by Change Order.

F. Allowance Schedule:
   1. Please carry an allowance of $3000.00 for the purchase of a project sign and plaque.

1.3 CONTINGENCY

A. Include in Contract five percent (5%) of the stipulated sum bid for use upon Owner's instruction as a contingency allowance.

B. Contractor's costs for products, delivery, installation, labor, insurance, payroll, taxes, bonding, equipment rental, overhead, and profit will be included in Change Orders authorizing expenditure of funds from this contingency allowance.

C. Funds will be drawn from contingency allowance only by Change Order.

D. At closeout of Contract, funds remaining in contingency allowance will be credited to Owner by Change Order.

1.4 TESTING AND INSPECTION ALLOWANCES

A. Owner will provide Testing and Inspection Allowances.
   1. If testing and inspections fail, General Contractor will pay for additional testing.

1.5 SCHEDULE OF VALUES

A. Submit an electronic copy of the schedule of values to the Owner, Bill Fann, at bfann@cedartowngeorgia.gov, and the Architect, Audrey Burton, at audrey@ceviandesign.com, on Contractor's standard form.

B. Submit Schedule of Values as electronic file within 15 days after date established in Notice to Proceed.

C. Format: Use Table of Contents of this Project Manual. Identify each line item with number and title of major Specification Section. Also identify Site mobilization, bonds and insurance, and any other applicable costs.

D. Include in each line item amount of allowances as specified in this Section. For unit cost allowances, identify quantities taken from Contract Documents multiplied by unit cost to achieve total for each item.

E. Include within each line item, direct proportional amount of Contractor's overhead and profit.

F. Revise schedule to list approved Change Orders with each Application for Payment.

1.6 APPLICATION FOR PAYMENT

A. Submit to the Architect, Audrey Burton, at audrey@ceviandesign.com, each Application for Payment on AIA G702 - Application and Certificate for Payment and AIA G703 - Continuation Sheet for G702.

B. Content and Format: Use Schedule of Values for listing items in Application for Payment.

C. Submit updated construction schedule with each Application for Payment.

D. Substantiating Data: When Architect requires substantiating information, submit data justifying dollar amounts in question. Include the following with Application for Payment:
   1. Partial release of liens from major Subcontractors and vendors.
   2. Record Documents, for review by Owner, which will be returned to Contractor.
   3. Affidavits attesting to off-Site stored products.
   4. Construction Progress Schedule, revised and current.

1.7 CHANGE PROCEDURES

A. Submittals: Submit name of individual who is authorized to receive change documents and is responsible for informing others in Contractor's employ or Subcontractors of changes to the Work.

B. Carefully study and compare Contract Documents before proceeding with fabrication and installation of Work. Promptly advise Architect of any error, inconsistency, omission, or apparent discrepancy.

C. Requests for Interpretation (RFI) and Clarifications: Allot time in construction scheduling for liaison with Architect; establish procedures for handling queries and clarifications.
   1. Use AIA G716 - Request for Information for requesting interpretations.
   2. Architect may respond with a direct answer on the Request for Interpretation form, AIA G710 - Architect's Supplemental Instruction, or Proposal Request.

D. Architect will advise of minor changes in the Work not involving adjustment to Contract Sum or Contract Time by issuing supplemental instructions on AIA G710.

E. Architect may issue a Proposal Request, AIA G709, or Notice of Change including a detailed description of proposed change with supplementary or revised Drawings and Specifications, a change in Contract Time for executing the change with stipulation of overtime work required and with the period of time during which the requested price will be considered valid. Contractor will prepare and submit estimate within 5 days.

F. Contractor may propose changes by submitting a request for change to Architect, describing proposed change and its full effect on the Work. Include a statement describing reason for the change and the effect on Contract Sum and Contract Time with full documentation and a statement describing effect on the Work by separate or other Contractors.

G. Stipulated Sum Change Order: Based on Proposal Request, AIA G709, or Notice of Change and Contractor's fixed price quotation, or Contractor's request for Change Order as approved by Architect.

H. Unit Price Change Order: For Contract unit prices and quantities, the Change Order will be executed on a fixed unit price basis. For unit costs or quantities of units of that which are not predetermined, execute Work under Construction Change Directive. Changes in Contract Sum or Contract Time will be computed as specified for Time and Material Change Order.

I. Construction Change Directive: Architect may issue directive, on AIA G714 - Construction Change Directive signed by Owner, instructing Contractor to proceed with change in the Work, for subsequent inclusion in a Change Order. Document will describe changes in the Work and designate method of determining any change in Contract Sum or Contract Time. Promptly execute change.

J. Document each quotation for change in Project Cost or Time with sufficient data to allow evaluation of quotation.

K. Change Order Forms: AIA G701 - Change Order.

1.8 DEFECT ASSESSMENT

A. Replace the Work, or portions of the Work, not conforming to specified requirements.

B. If, in the opinion of Architect, it is not practical to remove and replace the Work, Architect will direct appropriate remedy or adjust payment.

C. The defective Work may remain, but unit sum/price will be adjusted to new sum/price at discretion of Architect and Owner.

D. Defective Work will be partially repaired according to instructions of Architect and unit sum/price will be adjusted to new sum/price at discretion of Architect and Owner.

E. Authority of Architect to assess defects and identify payment adjustments is final.

1.9 UNIT PRICES

A. Authority: Measurement methods are delineated in individual Specification Sections.

B. Measurement methods delineated in individual Specification Sections complement criteria of this Section. In event of conflict, requirements of individual Specification Section govern.

C. Take measurements and compute quantities. Architect will verify measurements and quantities.

D. Unit Prices indicated on Bid Form are for Contract purposes only. Actual quantities provided shall determine payment.
   1. When actual Work requires more or fewer quantities than those quantities indicated, provide required quantities at contracted unit sum/prices.

E. Payment Includes: Full compensation for required labor, products, tools, equipment, plant and facilities, transportation, services and incidentals; erection, application, or installation of item of the Work; overhead and profit.

F. Final payment for Work governed by unit prices will be made on basis of actual measurements and quantities accepted by Architect/Engineer multiplied by unit sum/price for Work incorporated in or made necessary by the Work.

G. Unit Price Schedule: see Section 00 43 00 Procurement Form Supplements

1.10 ALTERNATES

A. Alternates quoted on Bid Forms will be reviewed and accepted or rejected at Owner's option. Accepted Alternates will be identified in Owner-Contractor Agreement. The Owner-Contractor Agreement may identify certain Alternates to remain an Owner option for a stipulated period of time.

B. Coordinate related Work and modify surrounding Work. Description for each Alternate is recognized to be abbreviated but requires that each change shall be complete for scope of Work affected.
   1. Coordinate related requirements among Specification Sections as required.
   2. Include as part of each Alternate: Miscellaneous devices, appurtenances, and similar items incidental to or necessary for complete installation.
   3. Coordinate Alternate with adjacent Work and modify or adjust as necessary to ensure integration.

C. Schedule of Alternates:
   1. Alternate No. 1: Event Center Roof:
      a. Base Bid Item: Section 07 54 05 – Sheet Membrane Roofing – Mechanically Attached (Duro-Last Mechanically Fastened Systems Specifications) and Drawing number A1.5 including Roof Plan and Roof Details.
      b. Alternate Item: Section 07410 – Preformed Metal Roofing and Insulation and Drawing number A9.1 including Roof Plan and Roof Details.

   2. Alternate No. 2: Covered Pavilion Roof:
      a. Base Bid Item: Section 07 31 13 – Asphalt Shingles and Drawing numbers A6.1 and A6.2 including Covered Pavilion Plans, Sections, and Elevations.
      b. Alternate Item: Section 07410 – Preformed Metal Roofing and Drawing number A9.2 including Covered Pavilion Elevations and Section.

3. Alternate No. 3: Stamped Concrete at Event Center:
   a. Base Bid Item: Section 03 35 20 – Brushed Concrete Finishing and Drawing number A1.2 including Finish Plan and Schedule.
   b. Alternate Item: Drawing number A9.3 including Finish Plan and Schedule.

4. Alternate No. 4: Stamped Concrete Throughout Site:
   a. Base Bid Item: Section 03 35 20 – Brushed Concrete Finishing and Drawing number A1.2 including Finish Plan and Schedule.
   b. Alternate Item: Drawing number A9.4 including Stamped Concrete – Alternate Site Plan.

5. Alternate No. 5: Brick Pavers Throughout Site:
   a. Base Bid Item: Section 03 35 20 – Brushed Concrete Finishing and Drawing number A1.2 including Finish Plan and Schedule
   b. Alternate Item: Section 02515 – Brick Pavers (Brick Industry Association: Technical Notes on Brick Construction) and Drawing number A9.4 including Brick Paver – Alternate Site Plan and Details.

6. Alternate No. 6: Irrigation at Pavilion Lawn:
   a. Base Bid Item: Not in Scope of Work.
   b. Alternate Item: Section 02810 – Irrigation and Drawing number A9.5 including Irrigation at Pavilion Lawn – Alternate.

7. Alternate No. 7: Sprinkler Vault and Corresponding Piping:
   a. Base Bid Item: Not in Scope of Work.
   b. Alternate Item: Section 02660 – Water Distribution System and Drawing number C.3 including Site Utility Plan.

8. Alternate No. 8: Brick Masonry Throughout Project:
   a. Base Bid Item: General Shale: Millbrook, Section 04 20 00 – Unit Masonry and Drawing numbers A2.1, A4.3, and A6.2 including Exterior Elevations and Site Wall Details.
   b. Alternate Item: General Shale: Preservation Red, Section 04 20 00 – Unit Masonry and Drawing numbers A2.1, A4.3, and A6.2 including Exterior Elevations and Site Wall Details

PART 2 PRODUCTS - Not Used

PART 3 EXECUTION - Not Used

END OF SECTION

SECTION 01 25 00 - SUBSTITUTION PROCEDURES

PART 1 GENERAL

1.1 SECTION INCLUDES

A. Quality assurance.

B. Product substitution procedures.

1.2 QUALITY ASSURANCE

A. Contract is based on products and standards established in Contract Documents without consideration of proposed substitutions.

B. Products specified define standard of quality, type, function, dimension, appearance, and performance required.

C. Substitution Proposals: Permitted for specified products except where specified otherwise. Do not substitute products unless substitution has been accepted and approved in writing by Owner.

1.3 PRODUCT SUBSTITUTION PROCEDURES

A. Document 00 21 13 - Instructions to Bidders specifies time restrictions for submitting requests for substitutions during Bidding period.

B. Substitutions **may** be considered when a product becomes unavailable through no fault of Contractor.

C. Document each request with complete data, substantiating compliance of proposed substitution with Contract Documents, including:
   1. Manufacturer's name and address, product, trade name, model, or catalog number, performance and test data, and reference standards.
   2. Itemized point-by-point comparison of proposed substitution with specified product, listing variations in quality, performance, and other pertinent characteristics.
   3. Reference to Article and Paragraph numbers in Specification Section.
   4. Cost data comparing proposed substitution with specified product and amount of net change to Contract Sum.
   5. Changes required in other Work.
   6. Availability of maintenance service and source of replacement parts as applicable.
   7. Certified test data to show compliance with performance characteristics specified.
   8. Samples when applicable or requested.
   9. Other information as necessary to assist Architect/Engineer's evaluation.

D. A request constitutes a representation that Bidder:
   1. Has investigated proposed product and determined that it meets or exceeds quality level of specified product.
   2. Will provide same warranty for substitution as for specified product.
   3. Will coordinate installation and make changes to other Work that may be required for the Work to be complete with no additional cost to Owner.
   4. Waives claims for additional costs or time extension that may subsequently become apparent.
   5. Will coordinate installation of the accepted substitute, making such changes as may be required for the Work to be complete in all respects.
   6. Will reimburse Owner Architect for review or redesign services associated with re-approval by authorities having jurisdiction.

E. Substitutions will not be considered when they are indicated or implied on Shop Drawing or Product Data submittals without separate written request or when acceptance will require revision to Contract Documents.

F. Substitution Submittal Procedure:
   1. Submit requests for substitutions on CSI Form 13.1A Substitution Request-After the Bidding/Negotiating Stage.
   2. Submit electronic file to the Architect, Audrey Burton, at audrey@ceviandesign.com, of Request for Substitution for consideration. Limit each request to one proposed substitution.
   3. Submit Shop Drawings, Product Data, and certified test results attesting to proposed product equivalence. Burden of proof is on proposer.
   4. Architect will notify Contractor in writing of decision to accept or reject request.

1.4 INSTALLER SUBSTITUTION PROCEDURES

A. Document 00 21 13 - Instructions to Bidders specifies time restrictions for submitting requests for substitutions during Bidding period.

B. Document each request with:
   1. Installer's qualifications.
   2. Installer's experience in work similar to that specified.
   3. Other information as necessary to assist Architect’s evaluation.

C. Substitution Submittal Procedure:
   1. Submit electronic file to the Architect, Audrey Burton, at audrey@ceviandesign.com, of Request for Substitution for consideration. Limit each request to one proposed substitution.
   2. Architect will notify Contractor in writing of decision to accept or reject request.

PART 2 PRODUCTS - Not Used

PART 3 EXECUTION - Not Used

END OF SECTION

SECTION 01 30 00 - ADMINISTRATIVE REQUIREMENTS

PART 1 GENERAL

1.1 SECTION INCLUDES

A. Coordination and Project conditions.

B. Preconstruction meeting.

C. Site mobilization meeting.

D. Progress meetings.

E. Pre-installation meetings.

F. Closeout meeting.

1.2 COORDINATION AND PROJECT CONDITIONS

A. Coordinate scheduling, submittals, and Work of various Sections of Project Manual to ensure efficient and orderly sequence of installation of interdependent construction elements, with provisions for accommodating items installed later.

B. Verify that utility requirements and characteristics of operating equipment are compatible with building utilities. Coordinate Work of various Sections having interdependent responsibilities for installing, connecting to, and placing operating equipment in service.

C. Coordinate space requirements, supports, and installation of mechanical and electrical Work indicated diagrammatically on Drawings. Follow routing shown for pipes, ducts, and conduit as closely as practical; place runs parallel with lines of building. Use spaces efficiently to maximize accessibility for other installations, for maintenance, and for repairs.
   1. Coordination Drawings: Prepare as required to coordinate all portions of Work. Show relationship and integration of different construction elements that require coordination during fabrication or installation to fit in space provided or to function as intended. Indicate locations where space is limited for installation and access and where sequencing and coordination of installations are important.

D. Coordination Meetings: In addition to other meetings specified in this Section, hold coordination meetings with personnel and Subcontractors to ensure coordination of Work.

E. In finished areas, except as otherwise indicated, conceal pipes, ducts, and wiring within construction. Coordinate locations of fixtures and outlets with finish elements.

1.3 PRECONSTRUCTION MEETING

A. Contractor will schedule and preside over meeting after Notice of Award.

B. Attendance Required: Architect, Owner, appropriate governmental agency representatives, Construction Manager, and Contractor.

C. Minimum Agenda:
   1. Execution of Owner-Contractor Agreement.
   2. Submission of executed bonds and insurance certificates.
   3. Distribution of Contract Documents.

4. Submission of list of Subcontractors, list of products, schedule of values, and Progress Schedule.
5. Designation of personnel representing parties in Contract.
6. Communication procedures.
7. Procedures and processing of requests for interpretations, field decisions, submittals, substitutions, Applications for Payments, proposal request, Change Orders, and Contract closeout procedures.
8. Scheduling.
9. Critical Work sequencing.
10. Scheduling activities of Owner conducted Work.

D. Contractor: Record minutes and distribute electronically to participants within two days after meeting, to Architect, Owner, and those affected by decisions made.

1.4 SITE MOBILIZATION MEETING

A. Contractor will schedule and preside over meeting at Project Site prior to Contractor occupancy.

B. Attendance Required: Architect, Owner, Contractor, Contractor's Superintendent, Construction Manager, and major Subcontractors.

C. Minimum Agenda:
1. Use of premises by Owner and Contractor.
2. Owner's requirements.
3. Construction facilities and controls.
4. Temporary utilities.
5. Survey and building layout.
6. Security and housekeeping procedures.
7. Schedules.
8. Procedures for testing.
9. Procedures for maintaining record documents.
10. Requirements for startup of equipment.
11. Inspection and acceptance of equipment put into service during construction period.

D. Contractor: Record minutes and distribute electronically to participants within two days after meeting, to Architect, Owner, and those affected by decisions made.

1.5 PROGRESS MEETINGS

A. Schedule and administer meetings throughout progress of the Work at maximum bi-weekly intervals.

B. Contractor to make arrangements for meetings, prepare agenda with copies for participants, and preside over meetings.

C. Attendance Required: Job superintendent, major Subcontractors, applicable suppliers, Architect, and Owner, as appropriate to agenda topics for each meeting.

D. Minimum Agenda:
1. Review minutes of previous meetings.
2. Review of Work progress.
3. Field observations, problems, and decisions.
4. Identification of problems impeding planned progress.
5. Review of submittal schedule and status of submittals.
6. Review of off-site fabrication and delivery schedules.
7. Maintenance of Progress Schedule.
8. Corrective measures to regain projected schedules.
9. Planned progress during succeeding work period.

10. Coordination of projected progress.
11. Maintenance of quality and work standards.
12. Effect of proposed changes on Progress Schedule and coordination.
13. Other business relating to Work.

E. Contractor: Record minutes and distribute electronically to participants within two days after meeting, to Architect, Owner, and those affected by decisions made.

1.6 PRE-INSTALLATION MEETINGS

A. When required in individual Specification Sections, convene pre-installation meetings at Project Site Work of specific Section.

B. Require attendance of parties directly affecting, or affected by, Work of specific Section.

C. Notify Architect five days in advance of meeting date.

D. Prepare agenda and preside over meeting:
1. Review conditions of installation, preparation, and installation procedures.
2. Review coordination with related Work.

E. Contractor: Record minutes and distribute electronically to participants within two days after meeting, to Architect, Owner, and those affected by decisions made.

1.7 CLOSEOUT MEETING

A. Schedule Project closeout meeting with sufficient time to prepare for requesting Substantial Completion. Preside over meeting and be responsible for minutes.

B. Attendance Required: Contractor, Construction Manager, Architect, Owner, and others appropriate to agenda.

C. Notify Architect five days in advance of meeting date.

D. Minimum Agenda:
1. Start-up of facilities and systems.
2. Operations and maintenance manuals.
3. Testing, adjusting, and balancing.
4. System demonstration and observation.
5. Operation and maintenance instructions for Owner's personnel.
6. Temporary indoor-air-quality plan and procedures.
7. Contractor's inspection of Work.
8. Contractor's preparation of an initial "punch list."
9. Procedure to request Architect/Engineer inspection to determine date of Substantial Completion.
10. Completion time for correcting deficiencies.
11. Inspections by authorities having jurisdiction.
12. Certificate of Occupancy and transfer of insurance responsibilities.
13. Partial release of retainage.
14. Final cleaning.
15. Preparation for final inspection.
16. Closeout Submittals:
    a. Project record documents.
    b. Operating and maintenance documents.
    c. Operating and maintenance materials.
    d. Affidavits.
17. Final Application for Payment.

18. Contractor's demobilization of Site.
19. Maintenance.

E. Contractor: Record minutes and distribute electronically to participants within two days after meeting, to Architect, Owner, and those affected by decisions made.

PART 2 PRODUCTS - Not Used

PART 3 EXECUTION - Not Used

END OF SECTION

SECTION 01 32 16 - CONSTRUCTION PROGRESS SCHEDULE

PART 1 GENERAL

1.1 SECTION INCLUDES

A. Submittals.

B. Format.

C. Review and evaluation.

D. Distribution.

1.2 SUBMITTALS

A. Within five (5) days after date of Owner-Contractor Agreement, submit draft of proposed complete bar chart schedule for review. Include written certification that major Subcontractors have reviewed and accepted proposed schedule.

B. Within three (3) days after joint review, submit revised Progress Schedule.

C. Submit updated schedules with each Application for Payment.

D. Schedule Updates:
1. Overall percent complete, projected and actual.
2. Completion progress by listed activity and sub-activity, to within five working days prior to submittal.
3. Changes in Work scope and activities modified since submittal.
4. Delays in submittals or resubmittals, deliveries, or Work.
5. Adjusted or modified sequences of Work.
6. Other identifiable changes.
7. Revised projections of progress and completion.

E. Narrative Progress Report:
1. Submit with each monthly submission of Progress Schedule.
2. Summary of Work completed during the past period between reports.
3. Work planned during the next period.
4. Explanation of differences between summary of Work completed and Work planned in previously submitted report.
5. Current and anticipated delaying factors and estimated impact on other activities and completion milestones.
6. Corrective action taken or proposed.

1.3 FORMAT

A. Bar chart schedule to include at least:
1. Identification and listing in chronological order of those activities reasonably required to complete the Work, including:
   a. Subcontract Work.
   b. Major equipment design, fabrication, factory testing, and delivery dates including required lead times.
   c. Move-in and other preliminary activities.
   d. Equipment and equipment system test and startup activities.
   e. Project closeout and cleanup.

f. Work sequences, constraints, and milestones.

2. Listings identified by Specification Section number.
3. Identification of the following:
   a. Horizontal time frame by year, month, and week.
   b. Duration, early start, and completion for each activity and sub-activity.
   c. Critical activities and Project float.
   d. Sub-schedules to further define critical portions of Work.

1.4 REVIEW AND EVALUATION

A. Participate in joint review and evaluation of schedules with Architect at each submittal.

B. Evaluate Project status to determine Work behind schedule and Work ahead of schedule.

C. After review, revise schedules incorporating results of review, and resubmit within three (3) days.

1.5 DISTRIBUTION

A. Following joint review, distribute copies of updated schedules to Contractor's Project site file, to Subcontractors, suppliers, Architect, and Owner.

B. Instruct recipients to promptly report, in writing, problems anticipated by projections shown in schedules.

PART 2 PRODUCTS - Not Used

PART 3 EXECUTION - Not Used

END OF SECTION

SECTION 01 33 00 - SUBMITTAL PROCEDURES

PART 1 GENERAL

1.1 SECTION INCLUDES

A. Definitions.

B. Submittal procedures.

C. Proposed product list.

D. Product data.

E. Use of electronic CAD files of Project Drawings.

F. Shop Drawings.

G. Samples.

H. Design data.

I. Test reports.

J. Certificates.

K. Manufacturer's instructions.

L. Manufacturer's field reports.

M. Erection Drawings.

N. Construction photographs.

O. Contractor review.

P. Architect/Engineer review.

1.2 DEFINITIONS

A. Action Submittals: Written and graphic information and physical samples that require Architect's responsive action.

B. Informational Submittals: Written and graphic information and physical Samples that do not require Architect's responsive action. Submittals may be rejected for not complying with requirements.

1.3 SUBMITTAL PROCEDURES

A. Transmit each submittal with AIA G810 - Transmittal Letter.

B. Sequentially number transmittal forms. Mark revised submittals with original number and sequential alphabetic suffix.

C. Identify: Project, Contractor, Subcontractor and supplier, pertinent Drawing and detail number, and Specification Section number appropriate to submittal.

D. Apply Contractor's stamp, signed or initialed, certifying that review, approval, verification of products required, field dimensions, adjacent construction Work, and coordination of information is according to requirements of the Work and Contract Documents.

E. Schedule submittals to expedite Project, and submit electronically via email as PDF files to the Architect, Audrey Burton, at audrey@ceviandesign.com. Coordinate submission of related items.

F. For each submittal for review, allow fifteen (15) days excluding delivery time to and from Contractor.

G. Identify variations in Contract Documents and product or system limitations that may be detrimental to successful performance of completed Work.

H. Allow space on submittals for Contractor and Architect review stamps.

I. When revised for resubmission, identify changes made since previous submission.

J. Distribute copies of reviewed submittals as appropriate. Instruct parties to promptly report inability to comply with requirements.

K. Submittals not requested will not be recognized nor processed.

L. Incomplete Submittals: Architect will not review. Complete submittals for each item are required. Delays resulting from incomplete submittals are not the responsibility of Architect.

1.4 PROPOSED PRODUCT LIST

A. Within fifteen (15) days after date of Owner-Contractor Agreement, submit list of major products proposed for use, with name of manufacturer, trade name, and model number of each product.

B. For products specified only by reference standards, indicate manufacturer, trade name, model or catalog designation, and reference standards.

1.5 PRODUCT DATA

A. Product Data: Action Submittal: Submit to Architect for review for assessing conformance with information given and design concept expressed in Contract Documents.

B. Submit electronically via email as PDF files to the Architect, Audrey Burton, at audrey@ceviandesign.com.

C. Mark each copy to identify applicable products, models, options, and other data. Supplement manufacturers' standard data to provide information specific to this Project.

D. Indicate product utility and electrical characteristics, utility connection requirements, and location of utility outlets for service for functional equipment and appliances.

E. After review, produce copies and distribute.

1.6 ELECTRONIC CAD FILES OF PROJECT DRAWINGS

A. Electronic CAD Files of Project Drawings: May only be used to expedite production of Shop Drawings for the Project. Use for other Projects or purposes is not allowed.

B. Electronic CAD Files of Project Drawings: Distributed only under the following conditions:
   1. Use of files is solely at receiver's risk. Architect does not warrant accuracy of files. Receiving files in electronic form does not relieve receiver of responsibilities for measurements,

dimensions, and quantities set forth in Contract Documents. In the event of ambiguity, discrepancy, or conflict between information on electronic media and that in Contract Documents, notify Architect/Engineer of discrepancy and use information in hard-copy Drawings and Specifications.

2. CAD files do not necessarily represent the latest Contract Documents, existing conditions, and as-built conditions. Receiver is responsible for determining and complying with these conditions and for incorporating addenda and modifications.
3. User is responsible for removing information not normally provided on Shop Drawings and removing references to Contract Documents. Shop Drawings submitted with information associated with other trades or with references to Contract Documents will not be reviewed and will be immediately returned.
4. Receiver shall not hold Architect responsible for data or file clean-up required to make files usable, nor for error or malfunction in translation, interpretation, or use of this electronic information.
5. Receiver shall understand that even though Architect has computer virus scanning software to detect presence of computer viruses, there is no guarantee that computer viruses are not present in files or in electronic media.
6. Receiver shall not hold Architect responsible for such viruses or their consequences, and shall hold Architect harmless against costs, losses, or damage caused by presence of computer virus in files or media.

1.7 SHOP DRAWINGS

A. Shop Drawings: Action Submittal: Submit to Architect for assessing conformance with information given and design concept expressed in Contract Documents.

B. Indicate special utility and electrical characteristics, utility connection requirements, and location of utility outlets for service for functional equipment and appliances.

C. When required by individual Specification Sections, provide Shop Drawings signed and sealed by a professional Engineer responsible for designing components shown on Shop Drawings.
   1. Include signed and sealed calculations to support design.
   2. Submit Shop Drawings and calculations in form suitable for submission to and approval by authorities having jurisdiction.
   3. Make revisions and provide additional information when required by authorities having jurisdiction.

D. Submit electronically via email as PDF files to the Architect, Audrey Burton, at audrey@ceviandesign.com.

E. After review, produce copies and distribute.

1.8 SAMPLES

A. Samples: Action Submittal: Submit to Architect for assessing conformance with information given and design concept expressed in Contract Documents.

B. Samples for Selection as Specified in Product Sections:
   1. Submit to Architect for aesthetic, color, and finish selection.
   2. Submit Samples of finishes, textures, and patterns for Architect selection.

C. Submit Samples to illustrate functional and aesthetic characteristics of products, with integral parts and attachment devices. Coordinate Sample submittals for interfacing work.

D. Include identification on each Sample, with full Project information.

E. Submit number of Samples specified in individual Specification Sections; Architect will retain one Sample.

F. Reviewed Samples that may be used in the Work are indicated in individual Specification Sections.

G. After review, produce copies and distribute.

1.9 DESIGN DATA

A. Informational Submittal: Submit data for Architect's knowledge as Contract administrator or for Owner.

B. Submit information for assessing conformance with information given and design concept expressed in Contract Documents.

1.10 TEST REPORTS

A. Informational Submittal: Submit reports for Architect's knowledge as Contract administrator or for Owner.

B. Submit test reports for information for assessing conformance with information given and design concept expressed in Contract Documents.

1.11 CERTIFICATES

A. Informational Submittal: Submit certification by manufacturer, installation/application Subcontractor, or Contractor to Architect, in quantities specified for Product Data.

B. Indicate material or product conforms to or exceeds specified requirements. Submit supporting reference data, affidavits, and certifications as appropriate.

C. Certificates may be recent or previous test results on material or product but must be acceptable to Architect.

1.12 MANUFACTURER'S INSTRUCTIONS

A. Informational Submittal: Submit manufacturer's installation instructions for Architect's knowledge as Contract administrator or for Owner.

B. Submit printed instructions for delivery, storage, assembly, installation, adjusting, and finishing, to Architect in quantities specified for Product Data.

C. Indicate special procedures, perimeter conditions requiring special attention, and special environmental criteria required for application or installation.

1.13 MANUFACTURER'S FIELD REPORTS

A. Informational Submittal: Submit reports for Architect's knowledge as Contract administrator or for Owner.

B. Submit report in duplicate within 3 days of observation to Architect for information.

C. Submit reports for information for assessing conformance with information given and design concept expressed in Contract Documents.

1.14 ERECTION DRAWINGS

A. Informational Submittal: Submit Drawings for Architect's knowledge as Contract administrator or for Owner.

B. Submit Drawings for information assessing conformance with information given and design concept expressed in Contract Documents.

C. Data indicating inappropriate or unacceptable Work may be subject to action by Architect or Owner.

1.15 CONSTRUCTION PHOTOGRAPHS

A. Provide photographs of Site and construction throughout progress of Work produced by an experienced photographer acceptable to Architect.

B. Each month submit photographs with Application for Payment.

C. Photographs: Submit electronically via email as PDF files to the Architect, Audrey Burton, at audrey@ceviandesign.com

D. Take photographs as evidence of existing Project conditions.

E. Digital Images: Deliver complete set of digital image electronic files via email to Owner with Project record documents. Identify electronic media with date photographs were taken. Submit images that have same aspect ratio as sensor, un-cropped.

1.16 CONTRACTOR REVIEW

A. Review for compliance with Contract Documents and approve submittals before transmitting to Architect.

B. Contractor: Responsible for:
1. Determination and verification of materials including manufacturer's catalog numbers.
2. Determination and verification of field measurements and field construction criteria.
3. Checking and coordinating information in submittal with requirements of Work and of Contract Documents.
4. Determination of accuracy and completeness of dimensions and quantities.
5. Confirmation and coordination of dimensions and field conditions at Site.
6. Construction means, techniques, sequences, and procedures.
7. Safety precautions.
8. Coordination and performance of Work of all trades.

C. Stamp, sign or initial, and date each submittal to certify compliance with requirements of Contract Documents.

D. Do not fabricate products or begin Work for which submittals are required until approved submittals have been received from Architect.

1.17 ARCHITECT REVIEW

A. Do not make "mass submittals" to Architect. "Mass submittals" are defined as six or more submittals or items in one day or 15 or more submittals or items in one week. If "mass submittals" are received, Architect's review time stated above will be extended as necessary to perform proper review. Architect will review "mass submittals" based on priority determined by Architect after consultation with Owner and Contractor.

B. Informational submittals and other similar data are for Architect's information, do not require Architect's responsive action, and will not be reviewed or returned with comment.

C. Submittals made by Contractor that are not required by Contract Documents may be returned without action.

D. Submittal approval does not authorize changes to Contract requirements unless accompanied by Change Order, Architect's Supplemental Instruction, or Construction Change Directive.

E. Owner may withhold monies due to Contractor to cover additional costs beyond the second submittal review.

PART 2 PRODUCTS - Not Used

PART 3 EXECUTION - Not Used

END OF SECTION

SECTION 01 40 00 - QUALITY REQUIREMENTS

PART 1 GENERAL

1.1 SECTION INCLUDES

A. Quality control.

B. Tolerances.

C. References.

D. Labeling.

E. Mockup requirements.

F. Testing and inspection services.

G. Manufacturers' field services.

1.2 QUALITY CONTROL

A. Monitor quality control over suppliers, manufacturers, products, services, Site conditions, and workmanship, to produce Work of specified quality.

B. Comply with specified standards as the minimum quality for the Work except where more stringent tolerances, codes, or specified requirements indicate higher standards or more precise workmanship.

C. Perform Work using persons qualified to produce required and specified quality.

D. Supervise performance of Work in such manner and by such means to ensure that Work, whether completed or in progress, will not be subjected to harmful, dangerous, damaging, or otherwise deleterious exposure during construction period.

1.3 TOLERANCES

A. Monitor fabrication and installation tolerance control of products to produce acceptable Work. Do not permit tolerances to accumulate.

B. Comply with manufacturers' recommended tolerances and tolerance requirements in reference standards. When such tolerances conflict with Contract Documents, request clarification from Architect/Engineer before proceeding.

1.4 REFERENCES

A. For products or workmanship specified by association, trade, or other consensus standards, comply with requirements of standard except when more rigid requirements are specified or are required by applicable codes.

B. Conform to reference standard by date of issue current as of date for receiving Bids except where specific date is established by code.

C. Obtain copies of standards and maintain on Site when required by product Specification Sections.

D. When requirements of indicated reference standards conflict with Contract Documents, request clarification from Architect before proceeding.

E. Neither contractual relationships, duties, or responsibilities of parties in Contract nor those of Architect shall be altered from Contract Documents by mention or inference in reference documents.

1.5 LABELING

A. Attach label from agency approved by authorities having jurisdiction for products, assemblies, and systems required to be labeled by applicable code.

B. Label Information: Include manufacturer's or fabricator's identification, approved agency identification, and the following information, as applicable, on each label:
   1. Model number.
   2. Serial number.
   3. Performance characteristics.

C. Manufacturer's Nameplates, Trademarks, Logos, and Other Identifying Marks on Products: Not allowed on surfaces exposed to view in public areas, interior or exterior.

1.6 MOCK-UP REQUIREMENTS

A. Tests will be performed under provisions identified in this Section and identified in individual product Specification Sections.

B. Assemble and erect specified or indicated items with specified or indicated attachment and anchorage devices, flashings, seals, and finishes.

C. Accepted mockups shall be comparison standard for remaining Work.

1.7 TESTING AND INSPECTION SERVICES

A. Owner will employ and pay for specified services of an independent firm to perform testing and inspection.

B. Independent firm will perform tests, inspections, and other services specified in individual Specification Sections and as required by Architect.
   1. Laboratory: Authorized to operate at Project location.

C. Reports shall be submitted by independent firm to Architect, Contractor, and authorities having jurisdiction, in duplicate, indicating observations and results of tests and compliance or noncompliance with Contract Documents.

D. Cooperate with independent firm; furnish samples of materials, design mix, equipment, tools, storage, safe access, and assistance by incidental labor as requested.
   1. Notify Architect and independent firm 24 hours before expected time for operations requiring services.
   2. Make arrangements with independent firm and pay for additional Samples and tests required for Contractor's use.

E. Employment of testing agency or laboratory shall not relieve Contractor of obligation to perform Work according to requirements of Contract Documents.

F. Retesting or re-inspection required because of nonconformance with specified or indicated requirements shall be performed by same independent firm on instructions from Architect. Payment for retesting or re-inspection will be charged to Contractor.

G. Agency Responsibilities:
   1. Test Samples of mixes submitted by Contractor.
   2. Provide qualified personnel at Site. Cooperate with Architect and Contractor in performance of services.
   3. Perform indicated sampling and testing of products according to specified standards.
   4. Ascertain compliance of materials and mixes with requirements of Contract Documents.
   5. Promptly notify Architect and Contractor of observed irregularities or nonconformance of Work or products.
   6. Perform additional tests required by Architect.
   7. Attend preconstruction meetings and progress meetings.

H. Agency Reports: After each test, promptly submit two copies of report to Architect, Contractor, and authorities having jurisdiction. When requested by Architect, provide interpretation of test results.

I. Limits on Testing Authority:
   1. Agency or laboratory may not release, revoke, alter, or enlarge on requirements of Contract Documents.
   2. Agency or laboratory may not approve or accept any portion of the Work.
   3. Agency or laboratory may not assume duties of Contractor.
   4. Agency or laboratory has no authority to stop the Work.

1.8 MANUFACTURER'S FIELD SERVICES

A. When specified in individual specification Sections, require material or product suppliers or manufacturers to provide qualified staff personnel to observe Site conditions, conditions of surfaces and installation, quality of workmanship, startup of equipment, testing, adjusting, and balancing of equipment, commissioning as applicable, and to initiate instructions when necessary.

B. Report observations and Site decisions or instructions given to applicators or installers that are supplemental or contrary to manufacturer's written instructions.

PART 2 PRODUCTS - Not Used

PART 3 EXECUTION - Not Used

END OF SECTION

SECTION 01 70 00 - EXECUTION AND CLOSEOUT REQUIREMENTS

PART 1 GENERAL

1.1 SECTION INCLUDES

A. Field engineering.

B. Closeout procedures.

C. Starting of systems.

D. Demonstration and instructions.

E. Testing, adjusting, and balancing.

F. Project record documents.

G. Operation and maintenance data.

H. Manual for materials and finishes.

I. Manual for equipment and systems.

J. Spare parts and maintenance products.

K. Product warranties and product bonds.

L. Examination.

M. Preparation.

N. Execution.

O. Cutting and patching.

P. Protecting installed construction.

Q. Final cleaning.

1.2 FIELD ENGINEERING

A. Employ land surveyor registered at Project location and acceptable to Architect.

B. Locate and protect survey control and reference points. Promptly notify Architect/Engineer of discrepancies discovered.

C. Control datum for survey is indicated on Drawings.

D. Final Property Survey: Prior to Substantial Completion, prepare final property survey illustrating locations, dimensions, angles, and elevations of buildings and Site Work that have resulted from construction indicating their relationship to permanent benchmarks and property lines.

1. Show significant features (real property) for Project.
2. Include certification on survey, signed by surveyor, that principal metes, bounds, lines, levels, and elevations of Project are accurately shown.

1.3 CLOSEOUT PROCEDURES

A. Prerequisites to Substantial Completion: Complete following items before requesting Certification of Substantial Completion, either for entire Work or for portions of Work:
   1. Submit maintenance manuals, Project record documents, digital images of construction photographs, and other similar final record data in compliance with this Section.
   2. Complete facility startup, testing, adjusting, balancing of systems and equipment, demonstrations, and instructions to Owner's operating and maintenance personnel as specified in compliance with this Section.
   3. Conduct inspection to establish basis for request that Work is substantially complete. Create comprehensive list (initial punch list) indicating items to be completed or corrected, value of incomplete or nonconforming Work, reason for being incomplete, and date of anticipated completion for each item. Include copy of list with request for Certificate of Substantial Completion.
   4. Obtain and submit releases enabling Owner's full, unrestricted use of Project and access to services and utilities. Include certificate of occupancy, operating certificates, and similar releases from authorities having jurisdiction and utility companies.
   5. Deliver tools, spare parts, extra stocks of material, and similar physical items to Owner.
   6. Make final change-over of locks eliminating construction master-key system and transmit keys directly to Owner. Advise Owner's personnel of change-over in security provisions.
   7. Discontinue or change over and remove temporary facilities and services from Project Site, along with construction tools, mockups, and similar elements.
   8. Perform final cleaning according to this Section.

B. Substantial Completion Inspection:
   1. When Contractor considers Work to be substantially complete, submit to Architect:
      a. Written certificate that Work, or designated portion, is substantially complete.
      b. List of items to be completed or corrected (initial punch list).
   2. Within seven days after receipt of request for Substantial Completion, Architect will make inspection to determine whether Work or designated portion is substantially complete.
   3. Should Architect determine that Work is not substantially complete:
      a. Architect will promptly notify Contractor in writing, stating reasons for its opinion.
      b. Contractor shall remedy deficiencies in Work and send second written request for Substantial Completion to Architect.
      c. Architect will re-inspect Work.
      d. Redo and Inspection of Deficient Work: Repeated until Work passes Architect inspection.
   4. When Architect finds that Work is substantially complete, Architect will:
      a. Prepare Certificate of Substantial Completion on AIA G704 - Certificate of Substantial Completion, accompanied by Contractor's list of items to be completed or corrected as verified and amended by Architect/Engineer and Owner (final punch list).
      b. Submit Certificate to Owner and Contractor for their written acceptance of responsibilities assigned to them in Certificate.
   5. After Work is substantially complete, Contractor shall:
      a. Allow Owner occupancy of Project under provisions stated in Certificate of Substantial Completion.
      b. Complete Work listed for completion or correction within time period stipulated.

C. Prerequisites for Final Completion: Complete following items before requesting final acceptance and final payment.
   1. When Contractor considers Work to be complete, submit written certification that:
      a. Contract Documents have been reviewed.

b. Work has been examined for compliance with Contract Documents.
c. Work has been completed according to Contract Documents.
d. Work is completed and ready for final inspection.

2. Submittals: Submit following:
   a. Final punch list indicating all items have been completed or corrected.
   b. Final payment request with final releases and supporting documentation not previously submitted and accepted. Include certificates of insurance for products and completed operations where required.
   c. Specified warranties, workmanship/maintenance bonds, maintenance agreements, and other similar documents.
   d. Accounting statement for final changes to Contract Sum.
   e. Contractor's affidavit of payment of debts and claims on AIA G706 - Contractor's Affidavit of Payment of Debts and Claims.
   f. Contractor affidavit of release of liens on AIA G706A - Contractor's Affidavit of Release of Liens.
   g. Consent of surety to final payment on AIA G707 - Consent of Surety to Final Payment Form.
3. Perform final cleaning for Contractor-soiled areas according to this Section.

D. Final Completion Inspection:
1. Within seven days after receipt of request for final inspection, Architect will make inspection to determine whether Work or designated portion is complete.
2. Should Architect consider Work to be incomplete or defective:
   a. Architect will promptly notify Contractor in writing, listing incomplete or defective Work.
   b. Contractor shall remedy stated deficiencies and send second written request to Architect that Work is complete.
   c. Architect will re-inspect Work.
   d. Redo and Inspection of Deficient Work: Repeated until Work passes Architect inspection.

1.4 STARTING OF SYSTEMS

A. Coordinate schedule for startup of various equipment and systems.

B. Notify Architect seven days prior to startup of each item.

C. Verify that each piece of equipment or system has been checked for proper lubrication, drive rotation, belt tension, control sequence, and for conditions, which may cause damage.

D. Verify that tests, meter readings, and electrical characteristics agree with those required by equipment or system manufacturer.

E. Verify that wiring and support components for equipment are complete and tested.

F. Execute startup under supervision of manufacturer's representative or Contractors' personnel according to manufacturer's instructions.

G. When specified in individual Specification Sections, require manufacturer to provide authorized representative who will be present at Site to inspect, check, and approve equipment or system installation prior to startup and will supervise placing equipment or system in operation.

H. Submit a written report that equipment or system has been properly installed and is functioning correctly.

1.5 DEMONSTRATION AND INSTRUCTIONS

A. Demonstrate operation and maintenance of products to Owner's personnel two weeks prior to date of Substantial Completion.

B. Demonstrate Project equipment instructed by authorized manufacturer's representative who is knowledgeable about the Project.

C. Video Recordings: Provide high-quality color video recordings of demonstration and instructional sessions. Engage commercial videographer to record sessions. Include classroom instructions, demonstrations, board diagrams, and other visual aids. Include menu navigation.

D. Use operation and maintenance manuals as basis for instruction. Review contents of manual with Owner's personnel in detail to explain all aspects of operation and maintenance.

E. Demonstrate startup, operation, control, adjustment, troubleshooting, servicing, maintenance, and shutdown of each item of equipment at agreed time, at designated location.

F. Prepare and insert additional data in operations and maintenance manuals when need for additional data becomes apparent during instruction.

1.6 TESTING, ADJUSTING, AND BALANCING

A. Owner will appoint, employ, and pay for services of independent firm to perform testing, adjusting, and balancing.

B. Independent firm will perform services specified in Section 23 05 93 - Testing, Adjusting, and Balancing for HVAC.

C. Reports will be submitted by independent firm to Architect indicating observations and results of tests and indicating compliance or noncompliance with requirements of Contract Documents.

1.7 PROJECT RECORD DOCUMENTS

A. Maintain on Site one set of the following record documents; record actual revisions to the Work:
   1. Drawings.
   2. Specifications.
   3. Addenda.
   4. Change Orders and other modifications to the Contract.
   5. Reviewed Shop Drawings, product data, and Samples.
   6. Manufacturer's instruction for assembly, installation, and adjusting.

B. Ensure entries are complete and accurate, enabling future reference by Owner.

C. Store record documents separate from documents used for construction.

D. Record information concurrent with construction progress, not less than weekly.

E. Specifications: Legibly mark and record, at each product Section, description of actual products installed, including the following:
   1. Manufacturer's name and product model and number.
   2. Product substitutions or alternates used.
   3. Changes made by Addenda and modifications.

F. Record Drawings and Shop Drawings: Legibly mark each item to record actual construction as follows:

1. Include Contract modifications such as Addenda, supplementary instructions, change directives, field orders, minor changes in the Work, and change orders.
2. Include locations of concealed elements of the Work.
3. Identify depth of buried utility lines and provide dimensions showing distances from permanent facility components that are parallel to utilities.
4. Dimension ends, corners, and junctions of buried utilities to permanent facility components using triangulation.
5. Identify and locate existing buried or concealed items encountered during Project.
6. Measured depths of foundations in relation to finish [first] [main] floor datum.
7. Measured horizontal and vertical locations of underground utilities and appurtenances, referenced to permanent surface improvements.
8. Measured locations of internal utilities and appurtenances concealed in construction, referenced to visible and accessible features of the Work.
9. Field changes of dimension and detail.
10. Details not on original Drawings.

G. Submit PDF electronic files of marked-up documents to Architect before Substantial Completion.

1.8 OPERATION AND MAINTENANCE DATA

A. Submit in PDF composite electronic indexed file.

B. Drawings: Provide with reinforced punched binder tab. Bind in with text; fold larger drawings to size of text pages.

C. Contents: Prepare table of contents for each volume, with each product or system description identified, typed on white paper, in three parts as follows:
1. Part 1: Directory, listing names, addresses, and telephone numbers of Architect/Engineer, Contractor, Subcontractors, and major equipment suppliers.
2. Part 2: Operation and maintenance instructions, arranged by system and subdivided by Specification Section. For each category, identify names, addresses, and telephone numbers of Subcontractors and suppliers. Include the following:
   a. Significant design criteria.
   b. List of equipment.
   c. Parts list for each component.
   d. Operating instructions.
   e. Maintenance instructions for equipment and systems.
   f. Maintenance instructions for finishes, including recommended cleaning methods and materials, and special precautions identifying detrimental agents.
   g. Safety precautions to be taken when operating and maintaining or working near equipment.
3. Part 3: Project documents and certificates, including the following:
   a. Shop Drawings and product data.
   b. Air and water balance reports.
   c. Certificates.
   d. Originals of warranties and bonds.

1.9 MANUAL FOR MATERIALS AND FINISHES

A. Submit two copies of preliminary draft or proposed formats and outlines of contents before start of Work. Architect/Engineer will review draft and return one copy with comments.

B. For equipment or component parts of equipment put into service during construction and operated by Owner, submit documents within ten days after acceptance.

C. Submit one copy of completed volumes before Substantial Completion. Draft copy be reviewed and returned after final inspection, with Architect comments. Revise content of document sets as required prior to final submission.

D. Submit two sets of revised final volumes within ten days after final inspection.

E. Submit in PDF composite electronic indexed file of final manual within ten days after final inspection.

F. Building Products, Applied Materials, and Finishes: Include product data, with catalog number, size, composition, and color and texture designations. Include information for re-ordering custom-manufactured products.

G. Instructions for Care and Maintenance: Include manufacturer's recommendations for cleaning agents and methods, precautions against detrimental agents and methods, and recommended schedule for cleaning and maintenance.

H. Moisture Protection and Weather Exposed Products: Include product data listing applicable reference standards, chemical composition, and details of installation. Include recommendations for inspections, maintenance, and repair.

I. Additional Requirements: As specified in individual product Specification Sections.

J. Include listing in table of contents for design data, with tabbed fly sheet and space for insertion of data.

1.10 MANUAL FOR EQUIPMENT AND SYSTEMS

A. Submit two copies of preliminary draft or proposed formats and outlines of contents before start of Work. Architect will review draft and return one copy with comments.

B. For equipment, or component parts of equipment put into service during construction and operated by Owner, submit documents within ten days after acceptance.

C. Submit one copy of completed volumes before Substantial Completion. Draft copy will be reviewed and returned after final inspection, with Architect comments. Revise content of document sets as required prior to final submission.

D. Submit two sets of revised final volumes within ten days after final inspection.

E. Submit in PDF composite electronic indexed file of final manual within ten days after final inspection.

F. Each Item of Equipment and Each System: Include description of unit or system and component parts. Identify function, normal operating characteristics, and limiting conditions. Include performance curves, with engineering data and tests, and complete nomenclature and model number of replaceable parts.

G. Panelboard Circuit Directories: Provide electrical service characteristics, controls, and communications; typed.

H. Include color-coded wiring diagrams as installed.

I. Operating Procedures: Include startup, break-in, and routine normal operating instructions and sequences. Include regulation, control, stopping, shutdown, and emergency instructions. Include summer, winter, and special operating instructions.

J. Maintenance Requirements: Include routine procedures and guide for preventative maintenance and troubleshooting; disassembly, repair, and reassembly instructions; and alignment, adjusting, balancing, and checking instructions.

K. Include servicing and lubrication schedule and list of lubricants required.

L. Include manufacturer's printed operation and maintenance instructions.

M. Include sequence of operation by controls manufacturer.

N. Include original manufacturer's parts list, illustrations, assembly drawings, and diagrams required for maintenance.

O. Include control diagrams by controls manufacturer as installed.

P. Include Contractor's coordination drawings with color-coded piping diagrams as installed.

Q. Include charts of valve tag numbers, with location and function of each valve, keyed to flow and control diagrams.

R. Include list of original manufacturer's spare parts, current prices, and recommended quantities to be maintained in storage.

S. Include test and balancing reports.

T. Additional Requirements: As specified in individual product Specification Sections.

U. Include listing in table of contents for design data with tabbed dividers and space for insertion of data.

1.11 SPARE PARTS AND MAINTENANCE PRODUCTS

A. Furnish spare parts, maintenance, and extra products in quantities specified in individual Specification Sections.

B. Deliver to Project Site and place in location as directed by Owner; obtain receipt prior to final payment.

1.12 PRODUCT WARRANTIES AND PRODUCT BONDS

A. Obtain warranties and bonds executed in duplicate by responsible Subcontractors, suppliers, and manufacturers within ten days after completion of applicable item of Work.

B. Execute and assemble transferable warranty documents and bonds from Subcontractors, suppliers, and manufacturers.

C. Verify documents are in proper form, contain full information, and are notarized.

D. Co-execute submittals when required.

E. Include table of contents and assemble in three D side ring binder with durable plastic cover.

F. Submit prior to final Application for Payment.

G. Time of Submittals:

1. For equipment or component parts of equipment put into service during construction with Owner's permission, submit documents within ten days after acceptance.
2. Make other submittals within ten days after date of Substantial Completion, prior to final Application for Payment.
3. For items of Work for which acceptance is delayed beyond Substantial Completion, submit within ten days after acceptance, listing date of acceptance as beginning of warranty or bond period.

PART 2 PRODUCTS - Not Used

PART 3 EXECUTION

3.1 EXAMINATION

A. Verify that existing Site conditions and substrate surfaces are acceptable for subsequent Work. Beginning new Work means acceptance of existing conditions.

B. Verify that existing substrate is capable of structural support or attachment of new Work being applied or attached.

C. Examine and verify specific conditions described in individual Specification Sections.

D. Verify that utility services are available with correct characteristics and in correct locations.

3.2 PREPARATION

A. Clean substrate surfaces prior to applying next material or substance according to manufacturer's instructions.

B. Seal cracks or openings of substrate prior to applying next material or substance.

C. Apply manufacturer-required or -recommended substrate primer, sealer, or conditioner prior to applying new material or substance in contact or bond.

3.3 EXECUTION

A. Comply with manufacturer's installation instructions, performing each step in sequence. Maintain one set of manufacturer's installation instructions at Project Site during installation and until completion of construction.

B. When manufacturer's installation instructions conflict with Contract Documents, request clarification from Architect/Engineer before proceeding.

C. Verify that field measurements are as indicated on approved Shop Drawings or as instructed by manufacturer.

D. Secure products in place with positive anchorage devices designed and sized to withstand stresses, vibration, physical distortion, or disfigurement.
   1. Secure Work true to line and level and within specified tolerances, or if not specified, industry-recognized tolerances.
   2. Physically separate products in place, provide electrical insulation, or provide protective coatings to prevent galvanic action or corrosion between dissimilar metals.
   3. Exposed Joints: Provide uniform joint width and arrange to obtain best visual effect. Refer questionable visual-effect choices to Architect/Engineer for final decision.

E. Allow for expansion of materials and building movement.

F. Climatic Conditions and Project Status: Install each unit of Work under conditions to ensure best possible results in coordination with entire Project.
   1. Isolate each unit of Work from incompatible Work as necessary to prevent deterioration.
   2. Coordinate enclosure of Work with required inspections and tests to minimize necessity of uncovering Work for those purposes.

G. Mounting Heights: Where not indicated, mount individual units of Work at industry recognized standard mounting heights for particular application indicated.
   1. Refer questionable mounting heights choices to Architect/Engineer for final decision.
   2. Elements Identified as Accessible to Handicapped: Comply with applicable codes and regulations.

H. Adjust operating products and equipment to ensure smooth and unhindered operation.

I. Clean and perform maintenance on installed Work as frequently as necessary through remainder of construction period. Lubricate operable components as recommended by manufacturer.

3.4 CUTTING AND PATCHING

A. Employ original installers to perform cutting and patching.

B. Submit written request in advance of cutting or altering elements affecting:
   1. Structural integrity of element.
   2. Integrity of weather-exposed or moisture-resistant elements.
   3. Efficiency, maintenance, or safety of element.
   4. Visual qualities of sight-exposed elements.
   5. Work of Owner or separate contractor.

C. Execute cutting, fitting, and patching including excavation and fill to complete Work and to:
   1. Fit the several parts together, to integrate with other Work.
   2. Uncover Work to install or correct ill-timed Work.
   3. Remove and replace defective and nonconforming Work.
   4. Remove samples of installed Work for testing.
   5. Provide openings in elements of Work for penetrations of mechanical and electrical Work.

D. Execute Work by methods to avoid damage to other Work and to provide proper surfaces to receive patching and finishing.

E. Cut masonry and concrete materials using masonry saw or core drill.

F. Restore Work with new products according to requirements of Contract Documents.

G. Fit Work tight to pipes, sleeves, ducts, conduits, and other penetrations through surfaces.

H. Maintain integrity of wall, ceiling, or floor construction; completely seal voids.

I. At penetrations of fire-rated walls, partitions, ceiling, or floor construction, completely seal voids with fire-rated material according to Section 07 84 00 - Firestopping to full thickness of penetrated element.

J. Refinish surfaces to match adjacent finishes. For continuous surfaces, refinish to nearest intersection; for assembly, refinish entire unit.

K. Identify hazardous substances or conditions exposed during the Work to Architect/Engineer for decision or remedy.

3.5 PROTECTING INSTALLED CONSTRUCTION

A. Protect installed Work and provide special protection where specified in individual Specification Sections.

B. Provide temporary and removable protection for installed products. Control activity in immediate Work area to prevent damage.

C. Provide protective coverings at walls, projections, jambs, sills, and soffits of openings.

D. Use durable sheet materials to protect finished floors, stairs, and other surfaces from traffic, dirt, wear, damage, or movement of heavy objects.

E. Prohibit traffic or storage upon waterproofed or roofed surfaces. When traffic or activity is necessary, obtain recommendations for protection from waterproofing or roofing material manufacturer.

F. Prohibit traffic from landscaped areas.

3.6 FINAL CLEANING

A. Execute final cleaning prior to final Project assessment.
   1. Employ experienced personnel or professional cleaning firm.

B. Clean interior and exterior glass and surfaces exposed to view; remove temporary labels, stains, and foreign substances; polish transparent and glossy surfaces; and vacuum carpeted and soft surfaces.

C. Clean equipment and fixtures to sanitary condition with appropriate cleaning materials.

D. Replace filters of operating equipment.

E. Clean debris from roofs, gutters, downspouts, and drainage systems.

F. Clean Site; sweep paved areas, rake clean landscaped surfaces.

G. Remove waste and surplus materials, rubbish, and construction facilities from Site.

END OF SECTION

SECTION 03 35 20 – BRUSHED CONCRETE FINISHING

PART 1 - GENERAL

1.1 RELATED DOCUMENTS

A. Drawings and general provisions of the Contract, including General and Supplementary Conditions and Division 01 Specification Sections, apply to this Section.

1.2 SUMMARY

A. This Sections includes brushed concrete finish and related finishing items.

1.3 QUALITY ASSURANCE

A. Field Constructed Mock-Up: Prior to installing concrete, apply brushed concrete finish to concrete pavement mock-up with proposed workmanship and procedures to be expected in complete work.

1. Obtain Landscape Architect's acceptance of quantities of sample before start of final Work.
2. Replace unsatisfactory mock-up work; as directed, until acceptable to Landscape Architect.

B. Before commencement of the Work, Contractor shall coordinate with Landscape Architect to arrange for observation and approval of initial installation of cement concrete pavement. The approved initial installations shall serve as the standard to which all subsequent work shall adhere.

PART 2 - PRODUCTS

2.1 MATERIALS

A. Use materials and methods for project work to produce finishes acceptable to Landscape Architect. These may include but are not limited to the following:

1. Edgers with ¼ inch radius.
2. Groovers with ¼ inch radius and ¼ inch wide jointing capabilities.
3. Stiff bristle broom.
4. Other tools as necessary.

PART 3 - EXECUTION

3.1 BRUSHED FINISH

A. Apply a broom finish to exterior concrete pavement as indicated.

1. Immediately after float finishing, slightly roughen concrete surface by brooming with fiber-bristle broom perpendicular to long edges of pavement. Coordinate required final finish with Landscape Architect before application and with approved mock-up.

B. Mark location of joints with string for straight alignment.

C. Final Tooling: Hand tool edges of paving, gutters, curbs, and joints formed in fresh concrete with a jointing tool to the following radius. Repeat tooling of edges and joints after applying surface finishes.

1. Radius: ¼ inch.
2. Control joints at equal width of pavement on center.
3. Expansion joints at 20± feet on center.
4. Edges, continuous.

D. All joints in straight sections of pavement are to be perpendicular to pavement's long edges.

E. All joints in curved sections of pavement are to be tooled radially to the curve.

END OF SECTION

SECTION 04 20 00 - UNIT MASONRY

PART 1 GENERAL

1.1 SUBMITTALS:

A. Manufacturer's data: Submit copies of manufacturer's product specifications and instructions for each manufactured product, in accordance with Contract Conditions.

B. Manufacturer: General Shale: Lightweight Modular Brick C652, 6024006121, Millbrook.

C. Job Mock-up:

1. Lay a minimum of 2, 4'-0" wide x 4'-0" high sample wall panel of face brick, brick soldier course, scored CMU, accessories, anchors, and mortar. (One panel for specified brick, one panel for brick alternate.)

2. Orient panel with brick facing south.

3. Indicate the following characteristics:

   a. Bonding

   b. Joint Tooling and Mortar Color

   c. Brick Color and Texture

   d. Workmanship

4. Prepare panel at least 14 days prior to beginning masonry work. Should panel be disapproved, prepare additional panel until approved by Architect.

5. Maintain panel throughout work as standard for masonry work. Do not destroy panel until directed by Architect.

1.2 QUALITY ASSURANCE:

A. Standard practice requirements and recommendations of the Portland Cement Association's "Concrete Masonry Handbook", current edition, and Brick Institute of America.

1.3 JOB CONDITIONS:

A. Environmental requirements:

1. Lay no masonry when temperature of surrounding air has dropped below 45 F., unless it is rising and at no time when it has dropped below 40 F., except by written permission from Architect.
2. When masonry work is authorized during temperatures below 40 F., but above freezing, mortar shall be provided at temperature between 70 and 100 F. Maintain air temperature above 40 F. on both sides of masonry for at least 72 hours after laying.

B. Protection of work:

1. During erection, keep walls dry by covering at end of each day or shutdown period with a waterproof membrane; anchored and overhanging each side of wall at least 2'-0".

2. Remove misplaced mortar or grout immediately.

3. Exercise care to prevent embedment of mortar in exposed face of brick.

4. Protect door jambs and corners from damage during construction.

5. Protect sill, ledges and offsets from mortar droppings.

6. Protect finish of adjacent materials from staining.

7. Protect lower sections from mud splatter.

1.4 ALLOWABLE TOLERANCES:

A. Maximum variation from plumb:

1. In lines and surfaces of walls

a. 1/4" in 10'-0".

b. 1/2" in total height of wall.

B. Maximum variation from level:

1. In lines of sill, lintels, horizontal grooves or other conspicuous lines:

a. 1/4" in any bay or in 20"-0" maximum.

b. 1/2" in total course.

PART 2 PRODUCTS

2.1 MORTAR AND GROUT MATERIALS:

A. Masonry Cement: ASTM C91

B. Portland Cement: ASTM C150, Type I natural color, non-

C. staining. Hydrated Lime: ASTM C207, Type S.

D. Aggregate: ASTM C144 or ASTM C404, natural washed sand. Select sand to match characteristics and color.

E. Water Reducing and Plasticizing Admixture products:

1. Lambert Corporation, Mortartite.

2. Master Builders Company, Omicron Mortarproofing.

3. Sonneborn-Contech, Inc.., Trimix.

F. Water: Clean, potable, free from deleterious amounts of alkalies, acids and organic materials.

G. Mortar color for CMU shall be standard gray, for brick and scored CMU see color schedule.

2.2 MASONRY JOINT REINFORCEMENT:

A. Acceptable manufacturers:

1. AA Wire Products Co.

2. Dur-O-Wal, Inc.

3. Heckmann Building Products, Inc.

4. Hohmann and Barnard, Inc.

B. Masonry joint reinforcing shall be truss type.

1. Fabricate from cold drawn wire meeting ASTM-A82.

2. Longitudinal rods shall be 9 gauge deformed wires with a minimum 9 gauge cross wires welded to form triangular pattern. Wire finish shall be galvanized.

3. Width of reinforcing shall be 2" less than wall width, including any veneer.

4. Reinforcing for cavity wall construction shall be fabricated with moisture drips at 16" o.c.

5. Provide reinforcing in 10' sections, with prefabricated corners and tees as required.

C. Masonry ties: adjustable, galvanized, code approved wire size steel; size to extend to within 3/4" of face of masonry veneer. Install at a rate of one tie per 2.7 sq. ft. of veneer.

D. Column anchors: 1/4" diameter uncoated wire for welding to steel columns, with 1/4" diameter galvanized triangular ties. Sizes as recommended by manufacturer for use with block and brick sizes indicated.

E. Dovetail Anchors and Slots:

1. Dovetail anchor characteristics:

a. Material: 16 gauge galvanized steel

b. Size: 3-1/2" long by 1" wide shank by 1-1/2" wide flared end with mortar lug.

2. Dovetail slot Characteristics:

a. Material: 22 gauge galvanized steel

b. Size: 1" wide back by 1" deep with 5/8" throat

2.3 CONCRETE MASONRY UNITS:

A. Hollow load bearing units:
1. Meeting ASTM C-90, Grade N-1.
2. Nominal face dimensions: 8" x 16".

B. Special shapes: Provide where required for lintels, corners, jambs, sash, control joints, headers, bonding, and other conditions.

2.4 SCORED CONCRETE MASONRY:

A. [1]Georgia Masonry Supply 16” x 8” x4” scored face CMU. Color as shown in Color Schedule.

2.5 BRICK UNITS:

A. Brick shall be as shown on color schedule. .

B. Special shapes: Provide where required for lintels, corners, jambs, sash, control joints, headers, bonding, and other conditions.

2.6 WEEP WICKS:

1/4" inorganic fiber rope or medium density polyethylene tubes.

2.7 MASONRY CLEANING COMPOUND:

A. Acceptable products:

1. Hallmark Chemical Corp., DC-6
2. National Chemsearch Corp., Deox.

3. Process Solvent Co., Sure-Kleen 600.

B. Type: Inorganic Acid.

2.8 FLASHING FOR MASONRY:

A. 40 mil minimum total thickness, cold applied, rubberized asphalt integrally bonded to 8 mil minimum thickness high density, cross laminated polyethylene film.

B. Black in color.

2.9 MORTAR NETTING:

Nylon, high density polyethylene (HDPE), or polyester, 90% open mesh, 2” thick.

PART 3 EXECUTION:

3.1 MORTAR AND GROUT MIXING:

A. Mixing:

1. Mix mortar and grout in power-driven, drum-type batch mixer.

2. Add mortar admix to mortar mix per manufacturer's printed instructions.

3. Mix minimum of five minutes after addition of all materials.

4. Completely empty drum before recharging for next batch.

B. Proportions:

1. Type "S" mortar: Proportion materials by volume in accord with ASTM C-270 as follows:

a. One part masonry cement to 2 part Portland DD Cement to aggregate proportioned at not less DD than 2-1/4 nor more than three (3) times the DD volumes of cement used: or

b. One part Portland Cement and 2 to 1/4 parts hydrated lime to aggregate proportioned at not less than 2-1/4 nor more than three (3) times the combined volume of cement and lime used.

2. Type "N" mortar: Proportion materials by volume in accord with ASTM C-270 as follows:

a. One part masonry cement to aggregate proportioned at not less than 2-1/4 nor more three (3) times the volume of cement used; or

b. One part Portland Cement and 2 to 1-1/4 parts hydrated lime to aggregate proportioned at not less than 2-1/4 nor more than three (3) times the combined volume of cement and lime used.

C. Placing materials:

1. Retemper mortar as necessary to keep plastic. Use no mortar after setting has begun or after 2-1/2 hours of initial mixing.

3.2 REINFORCING INSTALLATION:

A. Install masonry joint reinforcing in masonry walls at 16" o.c. vertically.

B. Lap side rods 6" minimum at splices.

3.3 INSTALLATION OF MASONRY UNITS:

A. Use Type S mortar in all below grade load bearing and concrete masonry unit walls. Type N mortar may be used in Brick veneer.

B. Workmanship: Install no cracked, broken, or chipped units exceeding ASTM allowances.

1. Use abrasive power saws to cut brick and block. Avoid slivers less than 2" wide.

2. Lay brick plumb, true to line and with level courses spaced within allowable tolerances specified.

3. Lay exposed masonry in running bond pattern and center head joints in every course.

4. Stop off horizontal run by racking back in each course; toothing is not permitted.

5. Adjust units to final position while mortar is soft and plastic.

6. If units are displaced after mortar has stiffened, remove, clean joints and units of mortar and relay with fresh mortar.

7. Cutting and patching of finish masonry to accommodate work of other trades shall be done so as not to mar appearance of finished surface.

8. Adjust shelf angles to keep work level and at proper elevation.

9. When joining fresh masonry to set or partially set masonry, remove loose brick and mortar and clean and dampen exposed surface of set masonry prior to laying fresh masonry.

10. Coordinate build-in items as work progresses. Fill in around items solidly.

11. Bond each course at corners and intersections. Bond into or anchor to adjacent construction with metal anchors spaced 2 feet apart.

12. Use solid brick units where voids in hollow brick units would be visible.

C. Mortar beds:

1. Lay brick with full mortar coverage on horizontal and vertical joints in all courses.

2. Provide mortar on ends of masonry to fill head joints.

3. Rock closures into place with head joints thrown against two adjacent bricks in place.

4. Lay hollow concrete masonry units with full mortar coverage on horizontal and vertical face shell.

5. Do not pound corners or jambs to fit stretcher units after setting in place.

6. Where adjustment to corners or jambs must be made after mortar has started to set, remove mortar and replace with fresh mortar.

7. If it is necessary to move a unit after it has once been set in place, the unit shall

be removed form the wall, cleaned and set in fresh mortar.

8. Lintels, capping units, and all bearing plates set by the mason shall be set in full bed of mortar.

D. Joints:

1. Mortar joints shall be straight, clean and uniform in thickness except for minor variations required to maintain bond and locate returns. All exposed joints shall be [1] tooled concave brick joints made with a non-staining tool.

2. Flush cut all unexposed joints.

3. Control joints - Deep clean of all mortar and debris. Joints shall be 3/8" wide. Caulk as specified in Section 07920. Locate control joints in accord with printed recommendations in the Concrete Masonry Handbook, by the Portland Cement Association and as indicated on the drawings.

E. Flashing:

1. Clean surface of masonry smooth and free from projections which might puncture flashing material.

2. Place through-wall flashing on full bed of mortar.

3. Cover flashing with mortar.

4. Turn up corners at each end of flashing to form a dam over masonry openings.

F. Weep holes:

1. Provide weep holes at 32" o.c. horizontally at grade and at the head of masonry openings and in other locations where flashing is indicated.

2. Form weeps by placing 6" long pieces of rope wick in mortar joints, extending into cavity. Leave wicks in place and cut off flush with face of wall.

3. Keep weep holes and area above flashing free of mortar droppings.

G. Sealant Joints: Retain 1/2" deep x 1/4" wide sealant joint around outside perimeter of exterior doors, window frames, and other wall openings.

H. Pointing: Cut out defective mortar joints and holes in exposed work. Repoint with mortar.

I. Dry cleaning: Brush masonry surface with stiff bristle brush after mortar has set. Do not allow mortar droppings to harden on exposed surfaces.

3.4 JOINTS AND BOND:

A. CMU shall be laid in standard running bond with joints struck flush in concealed locations and tooled concave in exposed locations.

B. Brick shall be generally laid in common bond with 6th course headers and running bond.

3.5 FINAL CLEANING:

A. At least three weeks prior to application of cleaning solution to brickwork, apply solution to half of surface of job mock-up. Should discoloration of brick or mortar joints, staining or efflorescence appear on mock-up within one week, notify Architect and await further instructions.

B. No Cleaning involving chemical solutions shall take place within 7 days of placing masonry.

C. Prior to application of cleaning solution, pre-soak brick and mortar joints using clean water and flush off loose mortar and dirt.

D. Begin cleaning process at highest point of wall, working downward. Work in areas of 10-20 sq. ft. Flush wall as cleaning progresses to prevent accumulation of scum.

E. Do not scrub mortar joints with cleaning solution.

F. Protect adjacent materials subject it corrosion from contact with cleaning solution.

G. Apply specified cleaning compound, as tested on job mock-up in accordance with Manufacturer's printed instructions. Flush with clean water.

H. Remove paint stains, welding stains, and stains caused by related work in accordance with recommendations of the Structural Clay Products Institute, Technical Notes. Apply cleaning agents only after testing on job mock-up.

END OF DOCUMENT

THE BRICK INDUSTRY ASSOCIATION
TECHNICAL NOTES on Brick Construction | 14C
1850 Centennial Park Drive, Reston, Virginia 20191 | www.gobrick.com | 703-620-0010
July 2011

Paving Systems Using Clay Pavers in a Mortar Setting Bed

Abstract: This *Technical Note* describes the proper design and construction of pedestrian and light vehicular pavements made with clay pavers laid in a mortar setting bed.

Key Words: bonded systems, brick flooring, driveway, mortar, paving, plaza, rigid pavements, setting bed, sidewalk, unbonded systems.

SUMMARY OF RECOMMENDATIONS:

General
- Determine if application is for pedestrian applications or light or heavy vehicular traffic, and design with appropriate recommendations
- Implement regular maintenance program to maintain pavement in a safe and serviceable condition

Drainage
- Provide a minimum slope of ¼ in. per ft (20 mm/m or 2 percent grade)
- Provide weeps of at least a ⅜ in. (10 mm) diameter at the pavement edge at a maximum spacing of 24 in. (610 mm) o.c. or provide curb and gutter with appropriate slope
- Provide surface area drains as necessary
- For maximum surface runoff, orient continuous mortar joints parallel to direction of slope for drainage

Movement Joints
- Space expansion joints no more than 16 ft (4.9 m) o.c. for exterior pavements, and 24 ft (7.3 m) o.c. for interior applications
- For bonded systems:
  - Extend movement joint through entire pavement thickness from base up through pavers
- For unbonded systems:
  - Extend expansion joint through pavers and setting bed only
  - While alignment is not critical, place expansion joints as close as possible to control joints in concrete base

Clay Pavers
- For most residential, pedestrian and light vehicular applications, such as driveways, entranceways and passenger drop-offs, use clay pavers complying with ASTM C902
- For heavy vehicular applications, such as streets, commercial driveways and industrial applications, use clay pavers complying with ASTM C1272
- Minimum specified thickness of pavers in mortared paving system:
  - Pedestrian traffic: no minimum thickness
  - Light vehicular traffic: 1¼ in. (32 mm)
  - Heavy vehicular traffic: 2¼ in. (57 mm)

Mortar Setting Bed
- For exterior applications, use ASTM C270 Type M mortar
- For interior applications, use ASTM C270 Type M or Type S mortar
- Alternatively, mortar conforming to ANSI A118.1, A118.4 or A118.6 can be used
- For vehicular applications or extreme environments, use a latex-modified mortar
- Reinforce mortar setting bed in unbonded systems
- Thickness of mortar setting bed: minimum ⅜ in. (10 mm) and maximum 1½ in. (38 mm)
- During installation, lay setting bed no more than 2 ft (0.6 m) ahead of laying of pavers

Mortar/Grout Joints
- Mortar for the joints can be the same as used in the setting bed
- Completely fill joints with mortar or grout to minimize moisture penetration
- Tool with concave or grapevine jointer when mortar or grout becomes thumbprint hard
- Sand-filled joints over mortared brick paving are not recommended
- Dry sand and cement mixtures that are swept into joints between pavers are prone to early failure and are not recommended

Base
- Use a plain or reinforced concrete slab; minimum thickness of 4 in. (102 mm); minimum compressive strength of 4000 psi (27.6 MPa)
- For exterior applications, use concrete with a minimum air content of 6 percent for increased durability
- Finish with a rough texture to enhance bond to mortar setting bed
- Allow concrete to cure a minimum of seven days before installation of setting bed and pavers

Subbase and Subgrade
- Refer to *Technical Note* 14

© 2011 Brick Industry Association, Reston, Virginia

Photo 1
Clay Pavers in a Mortar Setting Bed

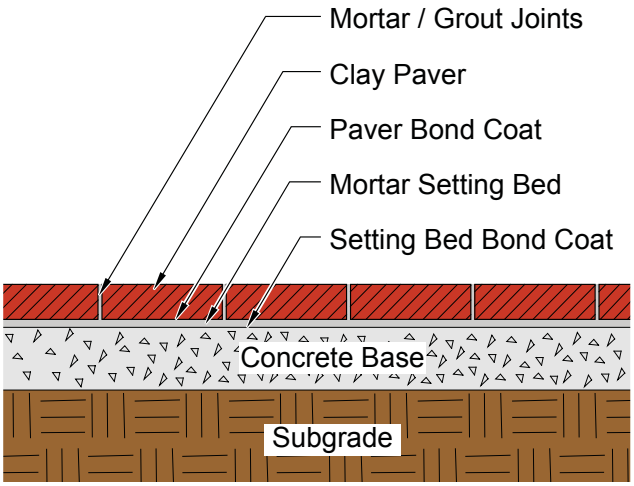

Figure 1
Typical Bonded Mortar Set Paver System

INTRODUCTION

This *Technical Note* covers the design, detailing and specification of clay pavers when set in a mortar bed (see Photo 1). This assembly uses mortar or grout to fill the joints between pavers. Mortar setting beds should be used only over a concrete base that provides adequate support. The ability of the system to support loads is based on the thickness of the concrete slab supporting the clay paving assembly with some minor contribution from the mortared clay pavers.

More periodic maintenance may be required of mortared paving assemblies than other brick paving assemblies because of the exposed mortar joints. However, when dealing with saturated soil conditions, steep slopes or an elevated/suspended concrete slab, this type of assembly may prove to be the most appropriate.

Applications

Clay pavers set in mortar are appropriate for virtually any paver application, ranging from pedestrian to heavy vehicular traffic. At a minimum, the system requires clay brick pavers bonded to a mortar setting bed. Below the setting bed, a concrete base should be placed and an aggregate subbase, if necessary. The thickness of the base and subbase materials is dependent on the traffic loads and on the subgrade conditions.

This *Technical Note* does not address specialized applications such as industrial and commercial areas requiring paving with chemical or thermal resistance.

Residential Patios, Walkways and Driveways. The combined thickness of base, setting bed and pavers should be enough to support traffic for residential applications, as in Figure 1. The concrete base must be a minimum 4 in. (102 mm) thick to ensure sufficient rigidity to avoid cracking the mortar joints from pressures above or below the pavement. The mortar bed thickness should be ⅜ to 1½ in. (10 to 38 mm) in thickness. There is no minimum thickness for the clay paver itself.

Commercial Walkways/Public Plazas. The pavement section shown in Figure 1 may also provide adequate performance for commercial walkways and public plazas. Where vehicular traffic is expected, the thickness of the base may be increased. In addition to increasing the base, an increase in paver thickness may also contribute to the pavement's load-bearing capacity. In many cases the thickness of the pavement system and any required steel reinforcing will be determined by the load-bearing capacity of the soil beneath the pavement or whether the pavement is subjected to freeze-thaw cycles.

Light Vehicular Traffic. For parking areas and neighborhood streets serving light vehicles, such as cars, garbage trucks and delivery vans, a more substantial base will be necessary. A pavement with a thicker concrete base or more reinforcement may be required depending on the loading and underlying soil conditions. Paver thickness should not be less than 1¼ in. (32 mm).

Heavy Vehicular Traffic. Paving applications exposed to more than 251 daily equivalent single axle loads (ESAL) from trucks or combination vehicles having three or more loaded axles are considered heavy vehicular applications. Such paving systems are beyond the scope of this *Technical Note* series. Refer to references on concrete base design for more information [Ref. 2]. Paver thickness is generally 2¼ in. (57 mm) or greater for these heavier loading conditions.

Suspended Structural Decks/Slabs Used as Walkways and Plazas. When a clay pavement with a mortar setting bed is constructed over an enclosed space below, a suspended structural concrete slab should be used (see Figure 2). Such a slab acts as the base for the pavement above. The thickness of a suspended structural slab will be based on its span and loading conditions. For this application, it is preferred that the mortar setting bed not be bonded to the suspended structural slab in order to allow the pavement to move independently of the slab. Structural design of suspended structural slabs is beyond the scope of this *Technical Note*, but more information can be found in References 2 and 4.

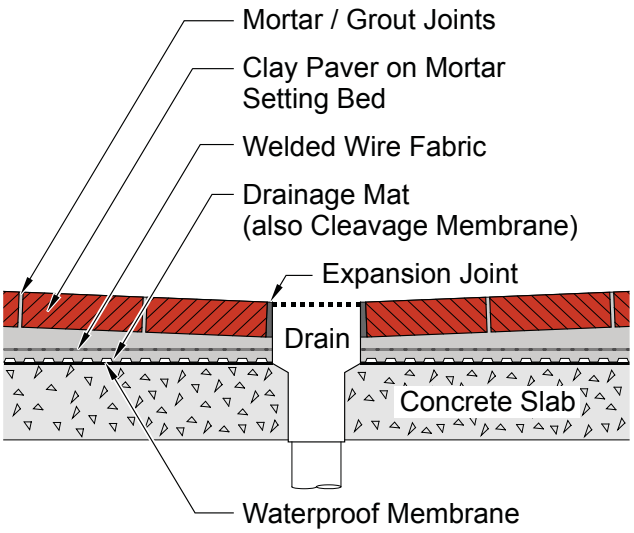

Figure 2
Suspended Structural Deck with Unbonded Mortar Set Paver System

DESIGN AND DETAILING CONSIDERATIONS

Climate

Mortar-set pavers can be used in all climatic conditions; however, slightly higher levels of maintenance should be anticipated in climates with freeze-thaw conditions, since the mortar is more susceptible to weathering than the brick pavers. Freeze-thaw climates may also dictate a thicker base to resist frost heave. Where the pavement experiences large temperature fluctuations, the positioning of movement joints often becomes critical to the success of the pavement. Temperature effects can be amplified by reflected heat from adjacent buildings and underlying insulation.

Pavement Section

Pavers set in a mortar setting bed should be installed only over a concrete base. Other types of bases are not rigid enough to resist cracking of the mortar joints. Concrete bases are typically lightly reinforced and contain control joints to control curing shrinkage and subsequent expansion and contraction. The base should be pitched to the same slope as the finished pavement so that the mortar setting bed can be a consistent thickness.

Subgrade

A description of different subgrade types is beyond the scope of this *Technical Note* and can be found in *Technical Note* 14 and in *Flexible Vehicular Paving – A Heavy Duty Applications Guide* [Ref. 3] or other appropriate references. For this *Technical Note*, the subgrade is considered to consist of either sand or gravel, or clay or silt. The latter are more sensitive to moisture and frost. For all subgrade types it is important that the subgrade is properly prepared and compacted before base construction. Clays and silts will require adequate protection against shrinkage and swelling and against frost heave. This may require the use of subbase layers and appropriate drainage. The advice of a properly qualified and experienced pavement designer should be sought in regard to the preparation of the subgrade.

Base

The design of the base is beyond the scope of this *Technical Note*, and the advice of a properly qualified and experienced pavement designer should be sought. For preliminary design, it is reasonable to assume that no less

than 4 in. (102 mm) of concrete base will be needed for sand and gravel subgrades. For clay or silt subgrades, an additional 4 in. (102 mm) of aggregate subbase should be added. Additional thickness may be required to accommodate heavy axle loads such as fire trucks and tractor trailers. The minimum compressive strength of the concrete should be 4000 psi (27.6 MPa). For exterior applications, use concrete with a minimum air content of 6 percent for increased durability.

Bonded vs. Unbonded Systems

Pavements with mortar setting beds are considered either bonded systems (see Figure 1) or unbonded systems (see Figure 2 and Figure 3). In a bonded system, the mortar bed and pavers act compositely with the underlying concrete base. In an unbonded system, the mortar bed and pavers can act independently of the underlying concrete base.

Clay pavers in a mortar setting bed can be used in light vehicular traffic applications. For unbonded systems, a maximum speed of 35 mph (56 kph) is considered appropriate. A bonded system is preferred when vehicular access includes light commercial and emergency vehicles. Bonded mortar setting beds may be used where speeds above 35 mph (56 kph) are anticipated. Bonded systems are also preferred for concrete slabs on grade when freeze-thaw conditions exist. Unbonded systems are preferred when the pavers are laid over a suspended structural deck.

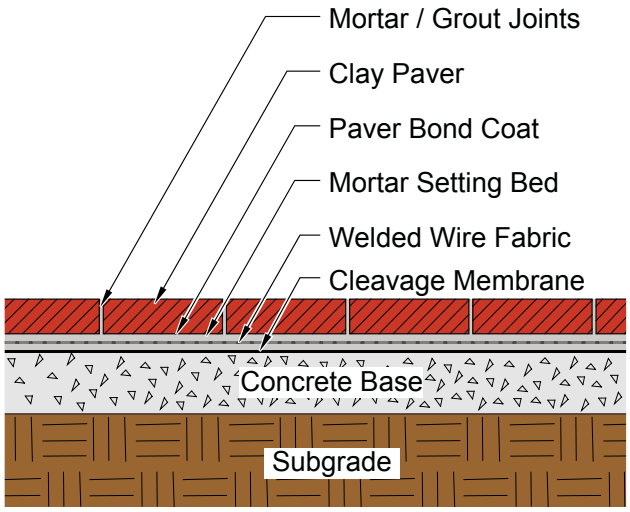

Figure 3
Typical Unbonded Mortar Set Paver System

Bonded Systems. In bonded systems, the clay pavers are adhered to the mortar setting bed, which is in turn adhered to the underlying concrete base. When the base moves, so will the pavers, and vice versa. As such, it is essential that all movement joints are carried through the concrete base, the mortar setting bed and the pavers. The location and design of movement joints should take into account the expansion and contraction properties of each of the pavement layers, as they will be subject to various temperature and moisture conditions. Movement joints in a concrete base should align with the paver expansion joint spacing. Mortar setting beds in bonded systems are usually between ⅜ and 1½ in. (10 and 38 mm) thick.

Unbonded Systems. In unbonded systems, the mortar bed is isolated from the underlying base by a cleavage membrane or crack isolation membrane. Reinforcement should be placed in the mortar setting bed of unbonded systems so that the setting bed and pavers can handle both compressive and tensile loads. The paver and mortar bed are free to move independently of the underlying concrete base; therefore, alignment of movement joints through the mortar bed and pavers with those through the concrete base is not required. Unbonded systems are preferred when the pavers are laid over a suspended structural deck.

For unbonded systems, control joints in the concrete base may be placed farther apart than the spacing of the movement joints in the mortar bed and pavers. The joints and mortar bed are unable to resist tensile forces; therefore, the mortar bed should be reinforced to prevent cracking between movement joint locations. Mortar setting beds are usually thicker in an unbonded system, since they must provide additional strength and adequate cover for the reinforcement, and may be between ¾ and 2 in. (19 and 51 mm) thick. Since a relatively smooth slab surface is required, the maximum tolerances of the concrete slab surface should be maintained.

Joints Between Pavers

Mortar joints between the pavers are typically ⅜ in. (10 mm) to create a typical masonry module of 8 in. (203 mm). The mortar joints not only bond the components together, but they also accommodate tolerances in the pavers. The joint thickness can vary depending on the type of installation method is used. Slightly narrower joints can be used in the bricklayer's method (described more fully in the INSTALLATION section on page 10) with the minimum joint width as thin as ¼ in. (6 mm) depending on the dimensional tolerances of the paving units. Some shrinkage of mortar will occur due to curing, so joints wider than ⅝ in. (16 mm) should be avoided. Wider joints may result

in the mortar separating from the paver or in mortar shrinkage that may allow moisture to enter the assembly and cause damage during freezing conditions. Use of sand in joints between pavers set in a mortar setting bed is not recommended because water has the potential to infiltrate the joints and settle at the top of the setting bed. Subsequent exposure to freezing and thawing cycles may lead to failure of the setting bed and debonding of the paver.

In the tile setter's method of construction, the joints are not filled until the setting bed has cured. In the bricklayer's method, the joint filling material may have the same constituents as the mortar, but is referred to as grout because of its method of installation. Slightly wider joints can be tolerated, with the normal range being ⅜ in. (10 mm) to ⅝ in. (16 mm)

Joints may be finished flush with or slightly recessed from the top of the pavers (see Figure 4). The former is preferred to allow faster drainage and to provide better frost resistance. Recessed joints or deeply tooled mortar joints are not recommended since they may be more prone to catching debris and may have a greater tendency for moss or algae growth in damp conditions. A concave surface is the most common profile and can add to the texture of the pavement by creating slight shadow lines.

Bond Patterns/Layout

As with other setting bed systems, the four basic bond patterns and their derivations are compatible with the mortar set system, except that the clay pavers will be ⅜ in. (10 mm) less than the typical module. While a majority of clay pavers used in mortar setting beds are 3⅝ by 7⅝ in. (92 by 194 mm) in size to conform to the 8 in. (203 mm) module when laid with a typical ⅜ in. (10 mm) joint, other sizes are available. See *Technical Note* 14 for further details of these bond patterns.

Various groupings of whole and half pavers can be installed in a repeating pattern when laid out in a module. As joint widths in a mortar-set system can be variable, several interesting effects can be included in the patterns. These include curves and fans, or setting the pavers slightly skewed relative to one another (see Figure 5). However, mortar joints should not exceed ⅝ in. (16 mm) in width, as mentioned previously. When laying pavers, exact grid line positions can be achieved by varying the joint widths to accommodate the size variations in the pavers. Typically, joint widths are between ¼ in. (6 mm) minimum and ⅝ in. (16 mm) maximum. Thinner joint sizes are more difficult to construct, and thicker joint sizes are more susceptible to cracking and increased water penetration.

Drainage

Runoff from mortar-set pavers occurs primarily at the pavement surface and can be directed in sheet flow to channel drains or to area inlets. The recommended minimum slope is ¼ in. per foot (20 mm/m) or 2 percent. Area

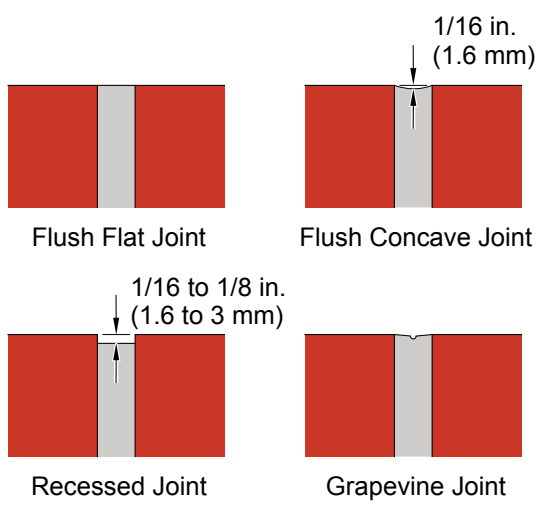

Figure 4
Mortar Joint Profiles

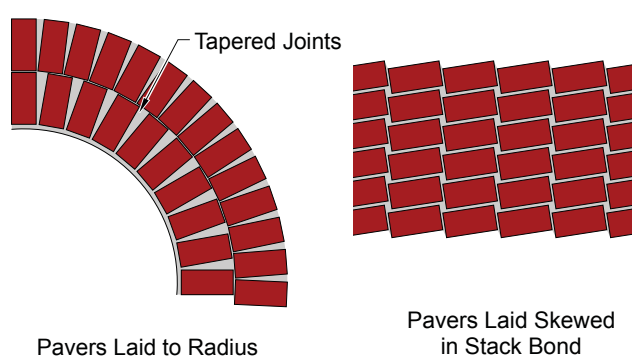

Figure 5
Laying Patterns with Variable Joint Thickness

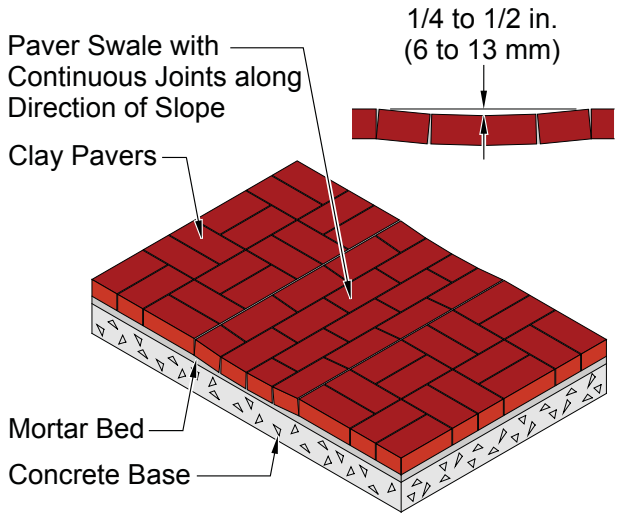

Figure 6
Drainage Swale

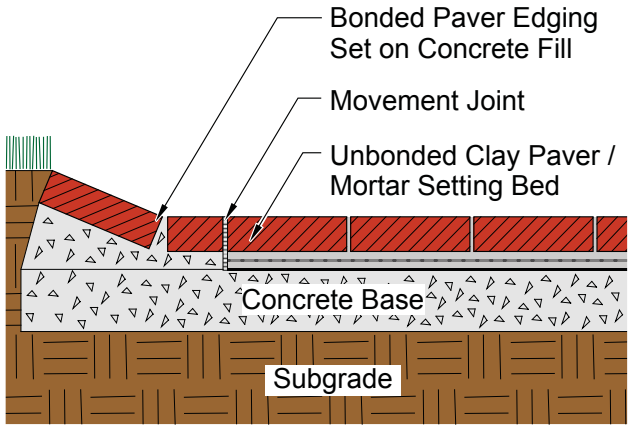

Figure 7
Unbonded System Edge Detail

drains can be incorporated in the middle of large paving systems and can be installed to drain water that has penetrated the mortar bed. Gutters and swales (see Figure 6) can be formed by slightly dishing or recessing the pavers in the mortar setting bed. Suspended structural slabs often incorporate a drainage mat under the mortar bed to allow the water to drain out at that level. To aid drainage, continuous joints should be aligned with the direction of water flow.

Edge Restraints

Bonded, mortar-set pavers do not require edge restraints. However, the exposed edge of the mortar bed should be sealed to prevent the ingress of moisture and potential subsequent frost damage. This is particularly important at planters and irrigated landscaping where water could seep under the system. Unbonded pavers placed on a cleavage membrane require minimal edge restraints for pedestrian loading (see Figure 7). The edging may include a bonded edging such as brick or stone pieces on a mortar bed, or pavers thin-set or glued directly to the base. If there is vehicular traffic, a more robust curb or suitably supported edging should be installed. Curbs can be constructed of brick, concrete or stone, and can be formed with or without a gutter. Steel angles used as edge restraints should be anchored to the base or to a suitable concrete foundation.

Movement Joints

Brick paving will expand and contract with a wider range of changing moisture and temperature conditions than that experienced by the base. As a result, pavements with a mortar setting bed should have movement joints that accommodate expansion and contraction. The brick paving assembly between the movement joints will form monolithic panels that act separately from adjacent panels. As the panel expands with rising temperatures, the movement joints will compress. In cold weather the panel will contract and the joint will open. The greatest amount of movement results from changes in temperature. A dark pavement surface can heat up to over 140 °F (60 °C), particularly on a structural deck where insulation is present below the surface, or a pavement surface may cool to below ambient air temperatures.

Calculation procedures that are used to determine movement of brick walls can be used for brick pavements as well; however, the temperature difference may be greater for paving assemblies. Movement joint spacing in the brick paving surface should not exceed 16 ft (4.9 m) in any direction, especially for exterior pavements. Mortared brick paving used indoors may not be exposed to the same temperature and moisture variations; therefore, the spacing can be increased but should be less than 24 ft (7.3 m) in any direction.

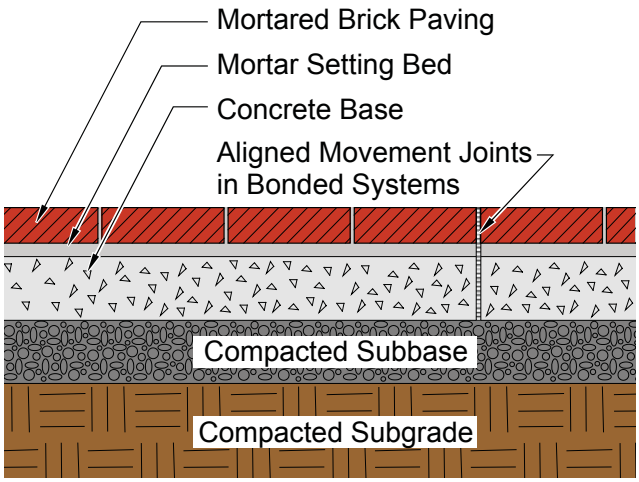

(a)

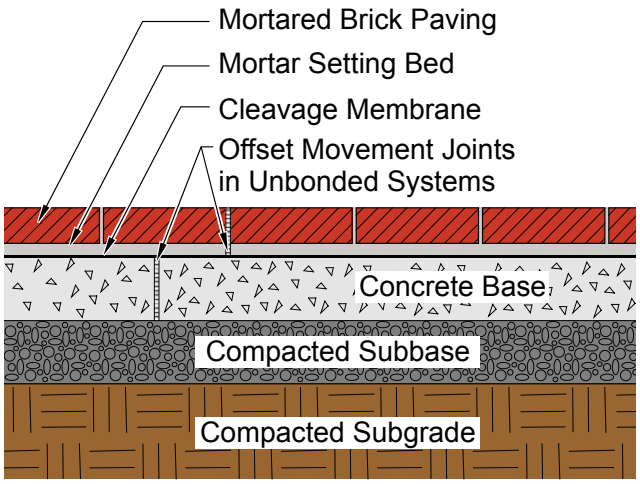

(b)

Figure 8
Movement Joints in Mortared Brick Pavement

Movement joints should penetrate the setting bed and the pavers, as well as the drain mat when included. In a bonded system, they should be aligned directly over the underlying joints in the concrete base (see Figure 8a). In an unbonded system, they should be as close as possible to the underlying joints, but it is not necessary to align them (see Figure 8b). The spacing of movement joints in the brick paving is typically the same for both bonded and unbonded systems.

The movement joints should consist of compressible joint filler, debonding strip and joint sealant (see Figure 9). Backer rods may be used in place of debonding strips where the pavement is unlikely to be subjected to stiletto heels and similar point loads. Movement joint width should be based upon the movement potential of the joint and the type of sealant material used. Manufacturers' details should be consulted for sealant properties.

Penetrations

A number of features, such as utility covers, tree pits, light pole bases, sign posts and street furniture, will penetrate through the pavement layers. These may either penetrate the entire pavement section or be anchored to the concrete base. Most utility covers and light poles penetrate the entire pavement section and will be immovable compared with the pavement. In these cases an isolation joint should be installed around the penetration. Sign posts and street furniture typically rest on and are anchored to the underlying concrete base and will move along with it. A movement joint may not be necessary in these locations, and the mortar can be carried up to the penetration (see Figure 10).

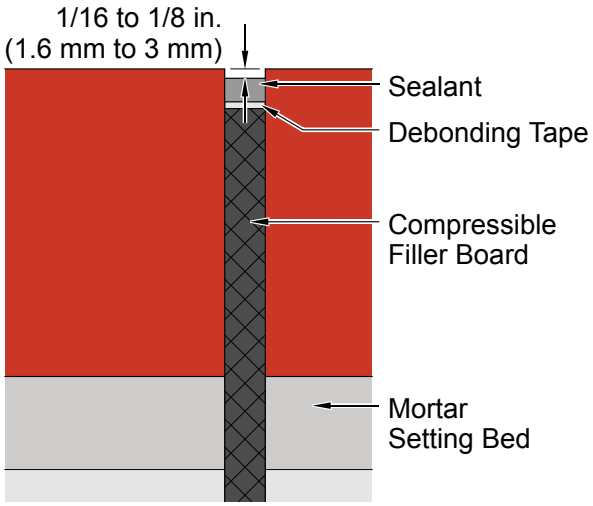

Figure 9
Movement Joint

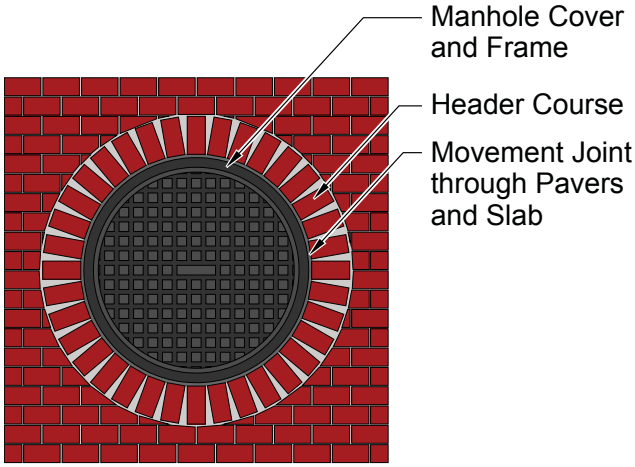

Figure 10
Typical Penetration

MATERIALS

Cleavage Membrane (Crack Isolation Membrane)

A cleavage membrane or crack isolation membrane is used only in an unbonded system. It is used to create a separation between the mortar bed and the underlying base so that the two layers can move independently of each other. This avoids stresses caused by horizontal movement between the two layers.

Plastic sheeting and roofing felt are among several materials that can be used as the cleavage membrane. The former includes:

- polyethylene sheeting complying with ASTM C171, *Specification for Sheet Materials for Curing Concrete* [Ref. 1];
- ASTM D4397, *Specification for Polyethylene Sheeting for Construction, Industrial and Agricultural Applications* [Ref. 1]; and
- polyethylene sheeting complying with ASTM D4068, *Specification for Chlorinated Polyethylene (CPE) Sheeting for Concealed Water-Containment Membrane* [Ref. 1].

The latter includes:

- asphalt saturated roofing felt complying with ASTM D226, *Specification for Asphalt Saturated Organic Felt Used in Roofing and Waterproofing* [Ref. 1]; and
- coal tar saturated roofing felt complying with ASTM D227, *Specification for Coal Tar Saturated Organic Felt used in Roofing and Waterproofing* [Ref. 1].

The minimum thickness for a single layer should be 6 mil (0.15 mm); however, the preferred option is to use two layers with a minimum thickness of 4 mil (0.10 mm) per layer.

Other appropriate materials to use as a crack isolation membrane include liquid-applied products or a layer of sand.

Drainage Mats

Drainage mats are used to allow horizontal drainage of water that might penetrate the paving surface. The drainage mat can be used in place of the cleavage membrane to form an unbonded system that is less susceptible to freeze-thaw damage, as well as on suspended deck applications. There are several types of proprietary drainage mats available that form a drainage path below the mortar bed, while still providing adequate support. The preferred type of drain mat has holes through the plastic core but does not include a filter cloth. Water is able to drain through channels formed in the underside of the sheet. These mats are typically ⅛ in. (3 mm) to ¼ in. (6 mm) in thickness (see Figure 11) and must have provisions for drainage at their edges. Use of drainage mats should be carefully considered in heavy vehicular applications.

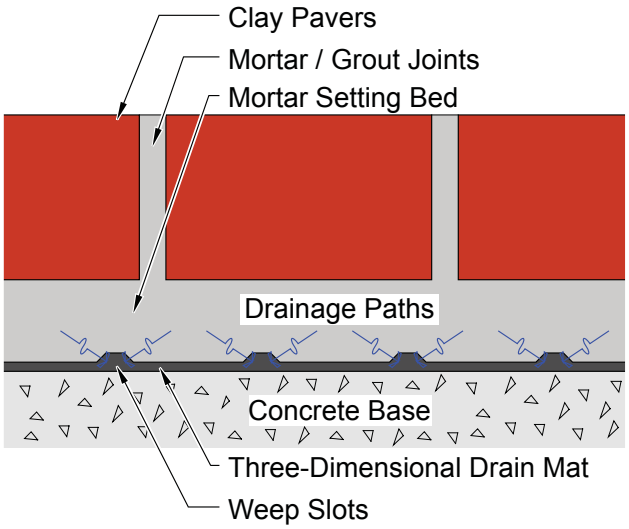

Figure 11
Mortared Brick Paving with Drainage Mat

Welded Wire Reinforcement

Welded wire reinforcement should be used to improve the tensile strength of the mortar bed between movement joints in all unbonded systems. This will help to prevent cracks from occurring as a result of expansion and contraction. Unchecked, such cracks can develop within the joints between pavers. Welded wire reinforcement should comply with the requirements of ASTM A82, *Specification for Steel Wire, Plain, for Concrete Reinforcement* [Ref. 1] and ASTM A185, *Specification for Steel Welded Wire Reinforcement, Plain, for Concrete* [Ref. 1]. Square opening sizes of 2 and 3 in. (50 and 75 mm) can be used with 16 gage or 13 gage wires, respectively, in both

directions. The present designations of these welded wire meshes are 2 × 2 - W0.3 × W0.3 (formerly 2 × 2 - 16/16) and 3 × 3 - W0.7 × W0.7 (formerly 3 × 3 - 13/13).

Movement Joint Filler

The compressible filler in a movement joint must be strong enough to prevent the sealant from being easily compressed into the joint. For this reason board type products are preferred over backer rods. There are several different types of compressible filler material that can be used. These include cork, sponge rubber and polyurethane bonded recycled rubber. These products should comply with the requirements of ASTM D1751, *Specification for Preformed Expansion Joint Filler for Concrete Paving and Structural Construction (Non-extruding and Resilient Bituminous Types)* [Ref. 1] and ASTM D1752, *Specification for Preformed Sponge Rubber and Cork Expansion Joint Fillers for Concrete Paving and Structural Construction* [Ref. 1].

Setting Bed Bond Coat

A thin slurry bond coat is typically recommended with the bonded system to adhere the mortar setting bed to the underlying concrete base. This slurry consists of a mixture of cement, sand and water, although the water can be replaced with a liquid latex additive to improve the strength and durability of the mortar. Typical proportions of sand and cement are equal parts of each material with water or latex added so that a creamy consistency is achieved, suitable for brushing onto the concrete base.

Setting Bed Mortar

Mortar for the setting bed can be a mixture of cement and fine aggregate or a proprietary mortar or grout. The setting bed mortar will be exposed to the same severe environmental conditions as the pavers. As such, the mortar will need to have low permeability and high cement content. The use of latex additives in place of part or all of the mix water often improves the durability, bond strength and resiliency of the mortar while reducing its permeability. Additive manufacturers' instructions should be followed.

Type M mortar is recommended for exterior mortared brick paving on grade. The setting bed mortar should conform to ASTM C270, *Specification for Mortar for Unit Masonry* [Ref. 1]. This mortar Type is necessary in freezing climates to allow the mortar to resist freeze-thaw conditions. In addition, mortar with a higher air content (generally above 5 to 7 percent by volume) is also known to be more resistant to freeze-thaw deterioration. ASTM C270 Type S mortar can be used as an alternative, since it may be more workable than Type M mortar. Interior applications may use either Type M or Type S mortar. Masonry cements should only be used based on past experience in a similar climate.

Alternatively, mortar conforming to ANSI A118.1, A118.4 or A118.6 can be used as appropriate for the application. Thin set mortars typical of tile installation should not be used for exterior clay brick pavements unless experience has shown that they have satisfactory performance.

Type M mortars are mixed with 1 part portland or blended cement, up to ¼ part lime and 2½ to 3 parts sand. The aggregate for the setting bed mortar should comply with the requirements of ASTM C144, *Specification for Aggregate for Masonry Mortar* [Ref. 1]. Other mortars are mixed according to the manufacturer's recommendations.

Paver Bond Coat

A thin slurry bond coat is used in the tile setter's method to bond the pavers to the top of the mortar bed. The slurry consists of a mixture of cement and water, although the water can be replaced with a liquid latex additive to improve the strength and durability.

Pavers

Pavers covered by ASTM C902, *Specification for Pedestrian and Light Traffic Paving Brick* [Ref. 1] and ASTM C1272, *Specification for Heavy Vehicular Paving Brick* [Ref. 1], can be installed in a mortar setting bed, but the designer should select the appropriate Class and Type for the project. For external use this will generally be Class SX, Type I pavers. Pavers from all Applications, PX, PS and PA, are suitable, subject to variable joint widths. For more detailed information on specifying clay pavers, refer to *Technical Note* 14.

Clay pavers of any texture are compatible with the mortar setting system. However, pavers with a pronounced surface texture may accumulate mortar and grout materials that can stain their surfaces. Some paver manufacturers are able to supply special pavers that have their top surface coated with paraffin wax. The coating should have a melting point that will resist melting in direct sun but can be removed by steam cleaning. Typically this will range between 150 and 170 °F (66 and 77 °C).

A minimum paver thickness of 1¼ in. (32 mm) is recommended for exterior applications subjected to light vehicular traffic. For heavy vehicular applications the pavers should be at least 2¼ in. (57 mm) thick. The visible dimensions of the paver (referred to as length and width) may be limited by bond patterns that require pavers with a certain length-to-width ratio to preserve bond lines. Pavers for use with mortar setting beds are typically sized to accommodate a joint approximately ⅜ in. (10 mm) wide. Specifying pavers that are 7⅝ by 3⅝ in. (194 by 92 mm) is common, and can accommodate most bond patterns. However, several manufacturers also produce different sizes and shapes that are suitable for one-to-one, two-to-one and three-to-one modular layouts.

Most pavers set in mortar are square edged to create a clean edge to tool the mortar against. Chamfered edges and other edge treatments can be used, but since the joint will be finished at the bottom of the chamfer, it may create a larger joint than anticipated.

Mortar/Grout for Joints

Although joint filling material is referred to as mortar in the bricklayer's method and as grout in the tile setter's method, these materials are virtually the same. Mortar or grout for the joints is the same as material that is being used for the mortar setting bed. As an alternate, ANSI A 118.1, A118.4 or A118.6 can be used to specify the mortar or grout joint material.

Use of additives should be based upon the bedding and jointing material requirements. Latex additives may improve the durability of the joints. The mortar or grout should be mixed to a stiff plastic consistency and installed as work progresses. The mortar may be pigmented, but the pigment should be limited to less than 10 percent by weight of cement. Carbon black used as a pigment should be limited to 2 percent by weight of cement.

Grout may be mixed from pre-packaged products that are prepared for use with clay pavers. These may also be pigmented, and since they are not site batched, they will produce a more consistent color. The grout should be mixed with water or latex additive to a plastic consistency. If an additive is used, the manufacturer's directions should be followed. Aggregates meeting the requirements of ASTM C144 may be used.

Jointing mortar or grout should not consist of a dry mixture of cement and sand, especially if it is swept dry in between the pavers. Such a mixture inhibits the ability of the cement to absorb moisture and cure properly. The result is mortar that may not be resistant to freeze-thaw cycles.

Joint Sealants

There are several different joint sealant materials that may be used at the top of movement joints. These include silicone, urethane and polysulfide products. These products are available in a wide range of colors. Where the sealant may be impacted by stiletto heels or other point loads, it should have a Shore A hardness of at least 35.

Joint sealant materials should comply with ASTM C920, *Specification for Elastomeric Sealants* [Ref. 1]. There are many different classifications of sealants. They may be single component (Type S) or multi-component (Type M). They can be self-leveling on flat surfaces (Grade P) or gunnable for inclined surfaces (Grade NS). Class 25 sealants can withstand an increase of 25 percent of the joint width, but Class 12½ can withstand only half of this movement. Use T (traffic) is typically required for paving applications. The manufacturer's recommendations should be followed for preparation and installation requirements.

INSTALLATION

Two different construction methods used to install clay pavers are the bricklayer's method and the tile setter's method. The bricklayer's method uses a stiff plastic mortar for the setting bed and for filling the joints as the work progresses. The tile setter's method uses a semi-dry mortar as the setting bed and delays joint filling until the bed has cured. The latter method is more common, since it tends to have a lower initial cost, but either method can be used successfully.

Preparation

Prior to installation of the mortar setting bed or pavers, the installer should verify that the conditions are suitable for installation and undertake some preparatory work. The base must conform to the recommended or specified tolerances and the installer must verify its finish is acceptable for installation. This will include cleanliness so as to achieve a bond or to enable horizontal movement. The installer must also verify that all fittings built in, under or through the paving are properly located and installed. In addition to utility access covers, conduits, tree pits and similar features, this also includes baseplates and bolts that attach to penetrating features. Lines, levels and coursing should be established, as well as verifying the position of movement joints and other special joint treatments.

For pavements above occupied spaces, the installer should make sure that waterproof membranes, drainage mats and insulation have been inspected and approved, and record that these are undamaged when beginning work. The installer should be aware of open joints or uneven surfaces that could restrict movement between the mortar bed and the base. These materials must be protected from damage and soiling during the work.

For bonded systems, the concrete base should have a fine brush or wood float finish, and all curing compounds and other materials that could affect the bond should be cleaned off. For unbonded systems the concrete base should have a steel trowel finish. The surface should be cleaned of all loose material prior to installing the mortar bed each day.

Two different preparatory methods are required, dependent on whether a bonded or unbonded system will be used.

Bonded System Preparation. When a bonded system is being used, it is important to dampen the concrete base with clean water so that it does not absorb the moisture from the setting bed mix, causing improper curing. This is usually undertaken several hours before placing the setting bed, and any excess surface water should be removed before applying the bond coat. A thin layer of setting bed bond coat is spread over the base with brushes to form a continuous uniform coating immediately before placing the setting bed. The thickness should be 1⁄16 in. (1.6 mm) or less. This work should be undertaken in small areas to avoid drying prior to covering with the mortar bed.

Unbonded System Preparation. Moisture content of the concrete base should be determined before applying the cleavage membrane so as not to trap moisture beneath the membrane. Prior to placement of the setting bed, the cleavage membrane should be placed over the base without forming folds or wrinkles. These may be detrimental to the creation of a true slip plane. Minimum end and side laps are typically 4 in. (102 mm) for membranes, and tears or cuts should be covered with a strip of membrane at least 12 in. (306 mm) in width. The welded wire mesh reinforcement should be placed over the cleavage membrane, lapped at joints by one full aperture. The mesh reinforcement should be supported so that it becomes embedded at mid-depth in the mortar setting bed. The edges of the wire mesh should be trimmed 1 in. (25 mm) from edges and movement joints.

Setting Bed and Paver Installation

Care should be taken with cementitious setting beds so that they are mixed, placed and cured without drying out. Initial set typically occurs in less than an hour, and only the amount that can be covered with pavers prior to initial set should be mixed at any time. The pavers should be cut to size with a wet saw to create clean edges. A paver splitter (guillotine cutter), or hammer and chisel can be used to cut pavers, but it may not result in straight cuts. If the installer works from the base side, care should be taken not to contaminate the base or to disturb the cleavage membrane or wire reinforcement. If the work is from the paver side, care should be taken to avoid disturbing the pavers that have just been set. Covering installed pavers with plywood sheets or other similar materials will reduce potential disturbance.

Bricklayer's Method. This method uses a stiff plastic mortar for the setting bed and joint filling. The setting bed should be spread out over the bond coat in a small area ahead of the laying face and should be slightly thicker than the required thickness to allow for compaction when the pavers are pressed into place. The clay pavers should be buttered with mortar on the bottom and edges that will abut pavers that are already in place. The pavers are then pressed into the mortar setting at the correct level. Excess mortar will be squeezed out of the joint and should be cleaned off with a trowel so that it does not stain the surface. If the joint is not completely full, then additional mortar should be worked into the joint with a trowel. Mortar that has reached initial set prior to placement of the pavers should be removed and discarded. Joints should be tooled to the required profile when the mortar

becomes thumbprint hard. The pavement should be cured under plastic sheeting or other methods to maintain moisture for at least seven days or as weather conditions dictate. It should not be opened to traffic until after this time.

Tile Setter's Method. The setting bed in this method is mixed dry and then spread and screeded to a uniform thickness with sufficient thickness for accurate setting of pavers to meet finished grade. When mixed with water, the mortar shall be of such a consistency and workability that will allow maximum compaction during tamping of the mortar bed. It is not adequate to leave the mortar bed partially compacted, as it will be prone to damage, particularly by frost. Mortar that has reached initial set prior to placement of the pavers should be removed and discarded.

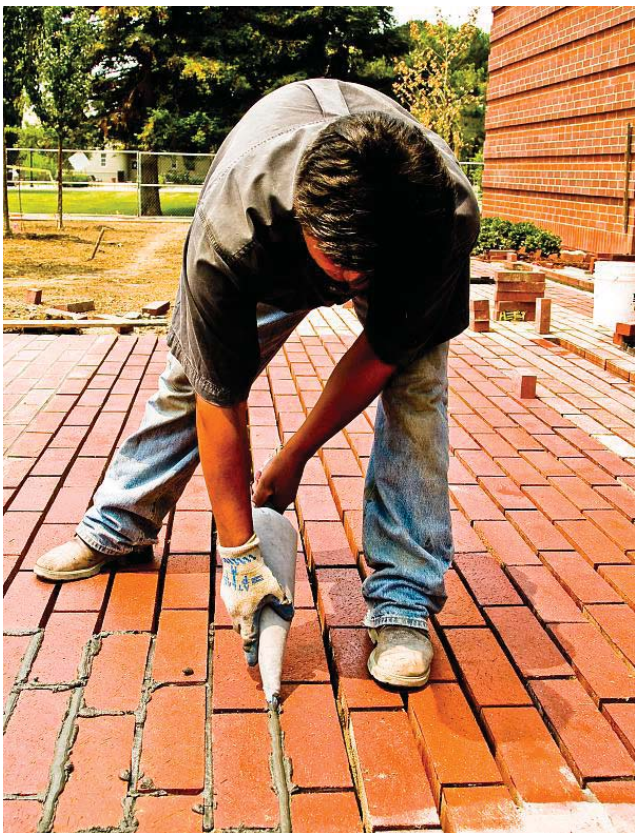

Photo 2
Installing Grout Between Pavers

A 1⁄16 to 1⁄8 inch (2 to 3 mm) thick paver bond coat is troweled onto the bottom surface of each paver as it is set in place. The pavers should be set accurately in the selected pattern with uniform joints and paver edges aligned within the required tolerances. A movable metal grid is often used to align the pavers. As in the bricklayer's method, if the installation pattern is modular, then it is important to determine the joint size based upon the actual paver dimensions. After a small area of pavers has been placed on the setting bed, it should be tamped with a wood leveling board and rubber mallets to achieve the correct elevations and profiles. The leveling board covers several pavers and helps to prevent lipping or an uneven surface. The setting bed should be thoroughly compacted, and if necessary any low pavers should be lifted and replaced with additional setting bed and fresh bond coat. The pavers should have full contact with the setting bed. The pavement should be cured under plastic sheeting or other methods to maintain moisture for at least seven days. Grouting of the joints can take place after an initial 24-hour curing period. Care should be taken to ensure that the joints do not become contaminated during this period.

When grouting the joints, the pavers should be damp to prevent premature drying of the grout. The work should be undertaken in small areas, cleaning as necessary to prevent grout stains on the paver surfaces. The grout should be worked in to the joints from the top (Photo 2), fully compressing the grout, so that the joints are completely filled and free of voids. Once the joints are completely full, the surface can be tooled to the required profile, taking care not to entrap air or to smear grout on the paver surfaces. Curing of the grout is undertaken by covering and maintaining in a damp condition for seven days. The pavement should not be opened to traffic until after this time.

Take care to ensure that the exposed that the exposed faces of the pavers are not smeared with mortar or grout during installation. The plastic mortar or grout can get in the texture of the paver and be difficult to remove. Both the bricklayer's and tile setter's methods should keep the paver faces as clean as possible. As mentioned previously, some paver manufacturers can wax their pavers at the plant to allow easier cleaning after the system has cured properly.

Installing Movement Joints

For a bonded system, movement joints in the base should not have pavers laid directly over them. Rather, control joints in the concrete base should align with expansion joints in the brick surface. Care should be taken to ensure that the expansion joint material is continued through the full depth of the mortar bed and along the full length of all movement joints. To form the expansion joint, it is often easier to form one side of the joint against a temporary wood edge, placing the filler material immediately before the adjacent mortar bed is installed.

Installing the joint sealant should take place only after the mortar and grout have cured for at least 14 days and the grout is dry. The sides of the pavers along the joint should be cleaned so that an effective bond can be achieved. If necessary, a primer can be applied to the joint sides before installing the sealant. A debonding strip should be placed over the top of the filler so that the sealant bonds only to the sides of the joint. The work should be carried out in accordance with the sealant manufacturer's recommendations.

Installation Methods to Avoid

Some installation methods for mortar-set systems should be avoided. These include the use of dry cement and sand mixtures that are swept into the vertical mortar joints or the use of soupy grout that is squeegeed into the mortar joints. The first method does not allow adequate water to penetrate the mix and properly hydrate the cement, which may result in poor durability. The second method creates cleaning problems and may not fill the joints well. Either of these installation methods should be avoided, since they will not be durable and will require extensive maintenance.

MAINTENANCE

Cleaning

Cleaning of mortared paving during construction should be conducted according to the clay paver manufacturer's or mortar/grout manufacturer's instructions. More information on cleaning products and methods can be found in *Technical Note* 20.

Mortar-set pavers can be kept clean in most environments by regular sweeping. In environments that lead to a greater degree of buildup of grease, tire marks or other stains, the pavers may be cleaned by pressure washing. Request paver manufacturer's recommended cleaning directions and clean a small test area to evaluate the results. Pressure washing can be more effective when hot water is used and when mild detergents are applied. Special cleaners may be required to clean grout that has absorbed stains. The grout-filled joints are generally resistant to this treatment, but aggressive pressure washing can cause localized failure if the grout cracks or becomes soft. Sealed joints should be cleaned with caution. More stubborn stains, including paint and gum, can be cleaned by scraping off the hard residue and then scrubbing with a stiff bristle brush and scouring powder. In some cases, using dry ice or carbon dioxide can solidify the material so it can be removed more easily. Proprietary cleaning solutions are also available to clean in damp or shady areas where moss and lichens have grown on the surface of the paving system. As always, clean a test area and follow cleaning solution manufacturer's instructions.

Snow Removal

Snow prevention and removal can be carried out in a number of ways — by hand, by machine or by chemicals. Hand methods include shovels and brooms. Recessed joints can result in the edges of pavers becoming chipped by shovels. Mechanical methods include snow blowers, snow plows, and buckets or brushes fitted on tractors or skid steers. This equipment should be properly adjusted so that it does not damage the pavement surface. Blades can be fitted with plastic or urethane cutting edges, if necessary. When tractor and particularly skid-steer mounted equipment is used, the pavement must be able to support the wheel loads without damage.

There are a range of de-icing chemicals that are used on brick pavements. However, mortar joints are particularly vulnerable to de-icing chemicals, especially those containing chlorides. Residue from de-icing agents left on the surface can result in staining or efflorescence. Use non-chloride-containing de-icers to avoid these types of problems.

Repairs

Repairs to damaged pavers can be undertaken by saw-cutting around the perimeter of the affected paver so that it can be removed without damaging adjacent units. It may be necessary to break the paver with a hammer and chisel to remove all the pieces. If the mortar setting bed is in good condition, the top ⅛ in. (3 mm) can be roughened and the replacement paver thin-set onto it. Otherwise, the setting bed should be chipped out to sound material and the pavers reinstalled as per the original construction. Care should be taken in removing the old system to minimize damage to any wire mesh or cleavage membranes that might be present.

Repairs to grout joints should include chipping out loose material and sawing or grinding to a depth equal to at least twice the joint width. The joint should be cleaned and fresh grout installed as per the original construction.

Repairs to movement joints should include cutting back debonded sealant and assessing the condition of adjacent sealant. The paver edges should be thoroughly cleaned and primed before fresh sealant is installed. A new debonding strip should be used.

Coatings

It is generally not necessary or recommended to apply a coating to exterior mortar-set pavers. Some penetrating water repellents may help prevent joint staining, but the risks usually outweigh the advantages. Other types of coatings, such as acrylic, mineral gum waxes or stearates, are more commonly applied to interior brick floors to facilitate cleaning. Their use should be carefully considered, as they may trap water within the paving system and create failures.

SUMMARY

Clay pavers in a mortar setting bed may be either bonded or unbonded to the underlying concrete base. Bonded pavements are commonly used on concrete slabs on grade and for vehicular applications, while unbonded are preferred for suspended structural slabs. When properly constructed, mortar-set pavers can meet most design and performance requirements. This must be balanced against the higher levels of maintenance that may be required and the increased costs.

Technical Notes on Brick Construction *are recommendations explicitly written for the design, installation and maintenance of masonry using fired clay brick. BIA does not advise the use of these recommendations with other products, including but not limited to those claiming to be similar to fired clay brick products. The information and suggestions contained in this* Technical Note *are based on the available data and the experience of the engineering staff and members of the Brick Industry Association. The information contained herein must be used in conjunction with good technical judgment and a basic understanding of the properties of brick masonry. Final decisions on the use of the information discussed in this* Technical Note *are not within the purview of the Brick Industry Association and must rest with the project architect, engineer and owner.*

REFERENCES

1. *Annual Book of Standards*, ASTM International, West Conshohocken, PA, 2011.

Volume 01.04

ASTM A82	“Specification for Steel Wire, Plain, for Concrete Reinforcement”
ASTM A185	“Specification for Steel Welded Wire Reinforcement, Plain, for Concrete”

Volume 04.02

ASTM C33	“Specification for Concrete Aggregates”
ASTM C144	“Specification for Aggregate for Masonry Mortar”
ASTM C171	“Specification for Sheet Materials for Curing Concrete”
ASTM C270	“Specification for Mortar for Unit Masonry”
ASTM C902	“Specification for Pedestrian and Light Traffic Paving Brick”
ASTM C1272	“Specification for Heavy Vehicular Paving Brick”

Volume 04.03

ASTM D1751	“Specification for Preformed Expansion Joint Filler for Concrete Paving and Structural Construction (Non-extruding and Resilient Bituminous Types)”
ASTM D1752	“Specification for Preformed Sponge Rubber and Cork Expansion Joint Fillers for Concrete Paving and Structural Construction “

Volume 04.04

ASTM C226	“Saturated Organic Felt Used in Roofing and Waterproofing”
ASTM D227	“Specification for Coal-Tar-Saturated Organic Felt used in Roofing and Waterproofing”

Volume 04.07
ASTM C920 "Specification for Elastomeric Sealants"

Volume 08.02
ASTM D4397 "Specification for Polyethylene Sheeting for Construction, Industrial and Agricultural Applications "

Volume 08.04
ASTM D4068 "Specification for Chlorinated Polyethylene (CPE) Sheeting for Concealed Water-Containment Membrane"

2. Delatte, N., "Concrete Pavement Design, Construction, and Performance," Portland Cement Association, Skokie, IL, 2008.
3. Flexible Vehicular Paving – A Heavy Duty Applications Guide, Brick Industry Association, Reston, VA, 2004.
4. Guide for Concrete Floor and Slab Construction, ACI 302.1 R-04, American Concrete Institute, Farmington Hills, MI, 2004.

SECTION 07 31 13 - ASPHALT SHINGLES

PART 1 GENERAL

1.1 SUMMARY

A. Section Includes:
1. Asphalt shingles.
2. Underlayment.
3. Eave and valley protection.
4. Ridge and eave vents.
5. Metal flashings and accessories.

1.2 SUBMITTALS

A. Product Data: Submit data indicating material characteristics, and limitations.

B. Samples: Submit two samples of each shingle color indicating color range and finish texture/pattern; for color and texture selection.

1.3 QUALITY ASSURANCE

A. Perform Work in accordance with NRCA Steep Roofing Manual.

1.4 ENVIRONMENTAL REQUIREMENTS

A. Do not install eave protection and shingles when ambient air, or wind chill temperatures are below 45 degrees F.

1.5 WARRANTY

A. Furnish twenty-five year manufacturer warranty for asphalt shingles.

PART 2 PRODUCTS

2.1 ASPHALT SHINGLES

A. Manufacturers:
1. Celotex Corporation.
2. Certain Teed Corporation.
3. Elk Corporation of America.
4. GAF Building Materials Corporation.
5. Owens Corning Fiberglas Corp.
6. Substitutions: permitted with prior approval of Architect

B. Product Description: Asphalt shingles conforming to ASTM D3018, Class A with Type I - Self Sealing. Black-Black Finish.

2.2 COMPONENTS

A. Underlayment: Grace Tri-Flex

B. Grace Ice and Water Shield at all ridges, hips, valleys, and eaves.

2.3 RIDGE, HIP, AND EAVE VENTS

A. Ridge and Hip Vents: Plastic, nominal 12 inches wide with vent openings that do not permit direct water or weather entry; to receive cap shingles; minimum 12 sq inches/foot net free area.

B. Starter and End Caps: As required to suit application.

2.4 ACCESSORIES

A. Nails: Standard round wire shingle type hot dipped zinc coated steel type, of sufficient length to penetrate through roof sheathing.

B. Lap Cement: Fibrated cutback asphalt type, recommended for use in application of underlayment, free of toxic solvents.

C. Flashing Materials:

1. Sheet Flashings: ASTM B209, 0.032 inch thick aluminum; mill finish with precoating of PVC, color as selected.

D. Bituminous Paint: Acid and alkali resistant type; black color.

2.5 FABRICATION

A. Form flashings to protect roofing materials from physical damage and shed water.

B. Form flashing sections square and accurate to profile, in maximum possible lengths, free from distortion or defects detrimental to appearance or performance.

C. Hem exposed edges of flashings minimum 1/4 inch on underside.

D. Apply bituminous paint on concealed surfaces of flashings.

PART 3 EXECUTION

3.1 EXAMINATION

A. Verify roof penetrations and plumbing stacks are in place and flashed to deck surface.

B. Verify roof openings are correctly framed.

C. Verify deck surfaces are dry, free of ridges, warps, or voids.

3.2 PREPARATION

A. Fill knot holes and surface cracks with latex filler at areas of bonded eave protection.

B. Broom clean deck surfaces under eave protection and underlayment.

3.3 INSTALLATION

A. Protective Underlayment Installation:
1. Place one ply of underlayment over area not protected by eave protection, with ends and edges weather lapped minimum 6 inches. Stagger end laps of each consecutive layer. Nail in place.
2. For all conditions where roof slope is less than 4:12, place second ply of underlayment over first layer with ends and edges weather lapped minimum 6 inches. Stagger end laps of each consecutive layer. Nail in place.
3. Weather lap and seal watertight with plastic cement items projecting through or mounted on roof.

B. Metal Flashing and Accessories Installation:
1. Weather lap joints minimum 2 inches and seal weather tight with plastic cement.
2. Secure in place with nails. Conceal fastenings.
3. Flash and seal Work weather tight, projecting through or mounted on roofing with plastic cement.

C. Asphalt Shingles Installation:
1. Place shingles in straight coursing pattern with 5 inch weather exposure to produce double thickness over full roof area. Install triple course of shingles at eaves.
2. Project first course of shingles 3/4 inch beyond fascia boards.
3. Extend shingles 1/2 inch beyond face of gable edge fascia boards.
4. Extend shingles on both slopes across valley in weave pattern and fasten. Extend shingles minimum of 12 inches beyond valley center line to achieve woven valley, concealing valley protection.

5. Cap hips and ridges with individual shingles, maintaining 5 inch weather exposure. Place to avoid exposed nails.
6. For roof slopes less that 4:12, after installation, place two daubs of plastic cement, one inch diameter under each individual shingle tab exposed to weather, to prevent lifting.
7. Install ridge vents centered over ridge.
8. Cap hips and ridges with individual shingles. Place to avoid exposed nails.
9. Coordinate installation of roof mounted components or Work projecting through roof with weather tight placement of Counter flashings.
10. Complete installation to provide weather tight service.

END OF SECTION

SECTION 07 54 05 - SHEET MEMBRANE ROOFING - MECHANICALLY ATTACHED

PART 1 GENERAL

1.1 SUMMARY

A. Section Includes:
1. Insulation over metal deck surface and vapor retarder.
2. Base flashings.
3. Roofing membrane expansion joints.
4. Mechanically attached membrane roofing.
5. Cant strips.
6. Counterflashing.

1.2 SUBMITTALS

A. Product Data: Submit characteristics on membrane materials, fasteners, seaming materials, flashing materials, insulation, vapor retarders.

B. Shop Drawings:
1. Indicate setting plan for tapered insulation, joint and termination detail conditions, and conditions of interface with other materials.
2. Indicate membrane layout and seam locations.

C. Samples:
1. Two samples of insulations, fasteners, membrane materials and accessories for verification of quality.

D. Manufacturer's Certificate: Certify that products meet or exceed specified requirements.

E. Manufacturer's Instructions: Submit special precautions required for seaming membrane.

F. Manufacturer Reports: Indicate procedures followed, including ambient temperatures, humidity, wind velocity during application.

G. Qualifications Statements:
1. Submit qualifications for manufacturer and applicator.
2. Submit manufacturer's approval of applicator.

1.3 QUALITY ASSURANCE

A. Perform Work according to NRCA Roofing and Waterproofing Manual.

B. Surface Burning Characteristics:
1. Foam Insulation: Maximum 75/450 flame-spread/smoke-developed index when tested according to ASTM E84.

C. Apply label from agency approved by authority having jurisdiction to identify each roof assembly component.

D. Manufacturer's Inspections: Request manufacturer's presence before start of Work of this Section to verify substrate acceptability and review installation procedures and completed work, so that specified warranty can be issued.

1. Promptly and satisfactorily repair unsatisfactory conditions disclosed by manufacturer's Site visits.

E. Perform Work according to local standards.

F. Manufacturer: Company specializing in manufacturing products specified in this Section with minimum five years' documented experience.

G. Applicator: Company specializing in performing Work of this Section with minimum five years' documented experience and approved by manufacturer.

1.4 DELIVERY, STORAGE, AND HANDLING

A. Store products in weather protected environment, clear of ground and moisture.

B. Protect foam insulation from direct exposure to sunlight.

1.5 AMBIENT CONDITIONS

A. Do not apply roofing membrane during inclement weather without proper weather protection.

B. Do not apply roofing membrane to damp or frozen deck surface or when precipitation is expected or occurring.

C. Do not expose materials vulnerable to water or sun damage in quantities greater than can be weatherproofed during same day.

1.6 WARRANTY

A. Furnish 25-year manufacturer's warranty, including coverage of materials and installation and resulting damage resulting from failure to resist penetration of moisture.

PART 2 PRODUCTS

2.1 DESCRIPTION

A. Sheet Membrane Roofing System: One-ply sheet membrane system with sheathing, vapor retarder, insulation, mechanically-attached membrane.

2.2 PERFORMANCE AND DESIGN CRITERIA

A. Low Slope Membrane Roof Edge Securement: Conform to SPRI ES-1 for wind speeds determined from applicable code.

2.3 SINGLE PLY ROOFING - MECHANICALLY ATTACHED

A. Manufacturer List: Basis of Design, Duro-Last® Mechanically Fastened Roofing System
   1. Substitutions: to be approved by Architect

B. Sheet Vapor Retarder:
   1. Materials: Plastic sheet.
   2. Adhesive: Fire retardant.
   3. Comply with manufacture compatible surface substrates.

C. Separation Sheet: Reinforced kraft paper

D. Flexible Flashings:
   1. Material: Same as membrane.
   2. Color: White.

E. Membrane:
   1. Material: PVC
   2. Reinforcement: Reinforced.
   3. Color: white
   4. Thickness: 16 mil.
   5. Comply with following criteria:

F. Seaming Materials: As recommended by membrane manufacturer

G. Protective Coating:
   1. Material: Neoprene/hypalon, with aluminum powder concentrate.
   2. Finish Coat Color: As selected.

H. Manufactured Roof Specialties: As specified in Section 07 71 00 - Roof Specialties.

2.4 ACCESSORIES

A. Fiber Cant and Tapered Edge Strips:
   1. Material: Insulation or Wood.
   2. Configuration: Preformed to 45-degree angle.

B. Insulation Adhesive: As recommended by insulation manufacturer.

C. Roofing Nails:
   1. Type: Galvanized, hot dipped, or non-ferrous type.
   2. Size and Configuration: As required to suit application.

D. Insulation Fasteners:
   1. Appropriate for purpose intended.
   2. Approved by FM and system manufacturer.
   3. Length: As required for thickness of material plus metal washers.

E. Sealants: As recommended by membrane manufacturer.

F. Strip Reglet Devices:
   1. Material: Galvanized steel
   2. Maximum possible lengths per location.
   3. Furnish attachment flanges.

G. Stack Boots: Flexible boot and collar with clamps for pipe stacks through membrane.

PART 3 EXECUTION

3.1 EXAMINATION

A. Verify that surfaces and Site conditions are ready to receive Work.

B. Verify that deck is supported and secure.

C. Verify that deck is clean and smooth, free of depressions, waves, or projections, properly sloped to drains, valleys, or eaves, and suitable for installation of roof system.

D. Verify that substrate is acceptable to manufacturer.

E. Verify that deck surfaces are dry and free of snow or ice.

F. Verify that roof openings, curbs, pipes, sleeves, ducts, and vents are solidly set and that wood cant strips wood nailing strips and reglets are in place.

3.2 PREPARATION

A. Metal Deck:
1. Mechanically fasten sheathing to roof deck according to manufactures recommendations.

3.3 APPLICATION

A. Insulation Application:
1. Mechanically fasten insulation to deck.
2. Place second layer of insulation with joints staggered.
3. Place constant thickness first layer and tapered thickness insulation second layer to required slope pattern.
4. Minimum Total Insulation Thickness: 3 inch.
5. Place boards perpendicular to deck flutes, with edges over flute surface for bearing support.
6. Cut insulation to fit neatly to perimeter blocking and around penetrations through roof.
7. Lay tapered boards for distance of 12 inches back from roof drains for positive drainage.

B. Membrane Application:
1. Install according to manufacturer's printed instructions.

C. Flashings and Accessories:
1. Apply flexible flashings to seal membrane to vertical elements.
2. Secure per manufacturers recommendations.
3. Coordinate installation of roof drains and related flashings.
4. Seal flashings and flanges of items penetrating membrane.
5. Pads:
   a. Install walkway pads around perimeter of HVAC units and to egress/access door.

3.4 CLEANING

A. Repair or replace defaced or disfigured finishes caused by Work of this Section.

3.5 PROTECTION

A. Protect building surfaces against damage from roofing Work.

B. Do not permit traffic over unprotected floor surfaces.

END OF SECTION

MECHANICALLY FASTENED SYSTEMS

TABLE OF CONTENTS

SECTION 1 - - - GENERAL	2
Introduction	2
Requirements	2
Tools	2
Membrane Description	3
Applicability	3
Drainage / Slope	3
Weather Considerations	3
Delivery	3
Handling	3
Storage	3
Substrate Separation	4
Chemical Resistance	4
Paint Application	4
Vapor Barriers	4
SECTION 2 - - - QUALITY ASSURANCE	5
Pre-Job Inspection	5
Core Cuts	5
Pull Tests	5
Fastener Selection and Deck Types	5
Plate Selection	5
Fastener Selection Based on Deck Type	6
Fastener Spacing Tables	7
SECTION 3 - - - IMPLEMENTATION	8
Roof Preparation	8
Recover – Built-Up Roofs (BUR)	8
Recover – Single-Ply Roofs	8
Recover – Metal Roofs Recover/Retrofit	8
New Construction	9
Installation	9
Wood Nailer	9
Insulation Selection and Installation	10
Perimeter Membrane Installation	10
Membrane Installation	10
Hot-Air Welding	11
Penetrations	11
Flashings	11
Pitch Pans	11
Two-Way Air Vents	11
Roof Drains and Scuppers	11
Expansion Joints	12
Walkway Pads	12
Cautions and Warnings	12

Duro-Last, Roof Trak and "World's Best Roof" are registered marks owned by Duro-Last, Inc.

Created: 12/04/2013 Rev.: 01/23/2014

SECTION 1 - - - GENERAL

INTRODUCTION

The following is the information required to install the Duro-Last roofing system. Each installation should be in compliance with the detail drawings, instructions, material descriptions, and other information stated herein.

REQUIREMENTS

1. The Duro-Last roofing system must be installed by an authorized Duro-Last contractor.
2. A Duro-Last Technical Representative must inspect the Duro-Last roofing system for compliance with the Duro-Last specifications before a commercial/industrial warranty is issued. Note: Duro-Last does not perform destructive testing unless visual inspection necessitates a need for further investigation.
3. All materials used in the installation of the Duro-Last roofing system must be products of Duro-Last, Inc. or accepted products as defined and described in the specification. Other materials must be accepted in writing by the Duro-Last Engineering Services department prior to being used in the Duro-Last roofing system.
4. The Duro-Last contractor is responsible for following all applicable building, plumbing, and electrical codes.
5. Buildings 40 ft. or taller and/or located within high wind zones (greater than 110 mph) or special wind regions, the following applies:
   a. The Duro-Last Engineering Services Department should be involved in determining the fastening requirements. Typically, the ASCE 7 Specification will be used to determine the fastening requirements. When appropriate, specifications set forth by entities such as FM Global, SPRI or State/Local Agencies will be utilized.
   b. Fastening tab spacing may not exceed 60 inches on center unless approved, in writing, by the Duro-Last Engineering Services Department.
6. It is the contractor's responsibility to verify the accuracy of information provided to Duro-Last, including but not limited to pull test results, building height, and roof dimensions. Measurements used during the quotation phase of a project must be checked for accuracy by the installing contractor.

TOOLS

The authorized Duro-Last contractor should have the following tools, which are necessary for the efficient and proper installation of the Duro-Last roofing system.

• Safety Equipment (such as fall protection)	• Equipment necessary to raise materials to the rooftop
• Hand welders (hot-air) with a spare heating element (Optional: Automatic welder)	• Silicone hand roller
• Extension cords - cord length of 100 ft., #12/3 wire w/ground	• Ground fault interrupter
• Variable speed power screw driver with reverse	• P-3 screwdriver tips for screws
• Electric hammer drill w/depth gauge	• R-3 square drive tips for concrete screws
• Metal snips, hacksaw, keyhole saw, hammers, scissors, utility knives with retractable blades	• Measuring tapes (100 ft. and 25 ft.), chalk line, markers, lumber crayon
• 2-inch flat chisels, pry bar	• Vise clamps, nail aprons, caulk gun, screw drivers
• Tack claw	• Ladders
• Tarps	• Gripull
• Core cutter	• Pull tester
• Detergent-based cleaning fluid and rags	• Panduit bander

Duro-Last, Roof Trak and "World's Best Roof" are registered marks owned by Duro-Last, Inc. Created: 12/04/2013 Rev.: 01/23/2014

MEMBRANE DESCRIPTION

A. The Duro-Last membrane is a polyvinylchloride polymer blend, which is reinforced with a high-strength weft-inserted polyester scrim that has a thread pattern of 18 x 14 threads per square inch. Refer to the Product Data Sheets for a listing of all of the test results and physical properties of the membrane.

1. The 40-mil thick membrane has a system weight of approximately 0.25 lb/ft^2. The prefabricated roof cover is supplied in sections that are either folded or rolled. Individual sections may be as large as 2,500 ft^2, with no single dimension exceeding 100 ft. Deck sheets can be fabricated up to 3,000 ft^2 when using 10-ft. laps, 30'-6" wide with a full reverse, not to exceed 100 ft. long.
2. The 50-mil thick membrane has a system weight of approximately 0.32 lb/ft^2. The prefabricated roof cover is supplied in sections that are either folded or rolled. Individual sections may be as large as 2,000 ft^2, with no single dimension exceeding 80 ft. Deck sheets can be fabricated up to 2,500 ft^2 when using 10-ft. laps, 30'-6" wide with a full reverse, not to exceed 80 ft. long.
3. The 60-mil thick membrane has a system weight of approximately 0.39 lb/ft^2. The prefabricated roof cover is supplied in sections that are either folded or rolled. Individual sections may be as large as 1,500 ft^2, with no single dimension exceeding 60 ft.

APPLICABILITY

The Duro-Last roofing system consists of the Duro-Last membrane, fasteners, prefabricated corners, parapet flashings, stack flashings, curb flashings, two-way vents, and other related Duro-Last approved products. The Duro-Last roofing system consists of products manufactured by Duro-Last, Inc., or accepted products as defined and described in the specifications. Alternate materials must be pre-approved in writing by the Duro-Last Engineering Services Department prior to their use with the Duro-Last roofing system.

DRAINAGE/SLOPE

Duro-Last has found no adverse effects on its membrane because of a lack of positive drainage, however, good roofing practices incorporate the use of positive drainage for the safety of the structure. The installing contractor is responsible to make sure roof drainage meets local building code requirements.

WEATHER CONSIDERATIONS

The Duro-Last membrane is designed to perform in all types of weather. The Duro-Last membrane is regularly subjected to DSET, EMMAQUA Exposure and low temperature cracking (ASTM D-2136) testing. Installation of the Duro-Last membrane is limited only by the exposure limitations of the installers. It is Duro-Last's recommendation that installation be performed within the temperature range of –15º to 115º F.

DELIVERY

The Duro-Last roofing system and related materials will be delivered to the location designated by the Duro-Last contractor in the original packaging and with shipping labels intact. Containers will be labeled with manufacturers/supplier's name, product name, and identification. Each shipment should be checked for damages and/or shortages at the time of delivery. The freight agent must note damaged materials and/or shortages on the freight bill. Concealed damage must be reported to the freight agent immediately. Materials damaged in shipping, handling, or storage cannot be used.

HANDLING

Once the Duro-Last roofing system is delivered, the contractor and contractor's crew are responsible for all handling and installation of the roofing system. Adequate personnel and equipment should be available to safely lift and place the Duro-Last roofing system onto the rooftop. Folded or rolled prefabricated sections of membrane must be placed on the roof near load-bearing members, and in a manner convenient to final placement.

STORAGE

Duro-Last materials should be kept clean and dry. Materials should be stored on pallets and covered with tarps. Care should be taken to place materials away from areas where water may pond or areas that water falls onto from higher elevations. All sealants must be stored at temperatures above 40° F. Keep combustible materials away from heat, sparks, and open flames. Follow precautions outlined on the containers or supplied by the material manufacturer.

Duro-Last, Roof Trak and "World's Best Roof" are registered marks owned by Duro-Last, Inc. Created: 12/04/2013 Rev.: 01/23/2014

SUBSTRATE SEPARATION

The Duro-Last membrane is defect-free when it leaves the factory. Certain substrates are not compatible with the Duro-Last membrane and may cause premature failure of the membrane. Over the substrates listed below, install an approved slip sheet, fan fold board or cover board prior to the installation of the Duro-Last membrane.

Acrylic Coatings	Extruded Polystyrene	Modified Bitumen	Shingles
Aluminum Coated Asphalt	Granulated Cap Sheet	Old Duro-Last Roofs	TPO (Thermoplastic Polyolefin)
Coated or Smooth Asphalt	Hypalon (CSPE)	Polyurethane	Sprayed Urethane Foam
Expanded Polystyrene	Mineral Surfaced Cap	Coal Tar Pitch	PVC/CPA Membranes

The Duro-Last membrane is compatible with the following substrates, and no separation is required.

CPE Roofing	GP DensDeck™ and DensDeck™ Primed	Glass Fiber Board
Cellular Glass Boards	Polyisocyanurate Insulation Boards	
EPDM (clean)	Lightweight\Structural Concrete Decks (Smooth)	Wood Decks
Gypsum	Smooth Pre-stressed Concrete Decks	

CHEMICAL RESISTANCE

Duro-Last membrane is resistant to the chemicals listed below. If any other chemicals are present on a particular roof, please contact the Engineering Services Department.

Acrylic Paint	Linseed Oil	Copper Sulfate	Lard (Animal Fats)
Latex Paint	Masonry Cleaner	Ferric Chloride	Phosphoric Acid
Fertilizer Solution	Muriatic Acid	Fiberglass Mat	Polypropylene
Fruit Juice	Oleic Acid	Furnace Residue	Zinc Chloride
Hydrogen Peroxide	Sodium Hydroxide	Detergent Solution	Bleach

PAINT APPLICATION

The Duro-Last membrane may be painted, although vinyl edging may not be painted. See the Chemical Resistance section for approved paint types for the membrane. If the vinyl edging is painted and causes damage to the edgings, Duro-Last Roofing, Inc. will not be held responsible for repair or replacement under the warranty. Should you have any questions, please contact the Duro-Last Quality Assurance Department.

VAPOR BARRIERS

Duro-Last recommends the use of vapor barriers, however it is the responsibility of the Duro-Last contractor of record to ensure that all applicable specifications, building codes, regulations and ordinances are complied with and followed. A roofing professional, such as a consultant or architect, should be utilized for correct roof system design prior to installing any roof system.

Duro-Last, Roof Trak and “World’s Best Roof” are registered marks owned by Duro-Last, Inc. Created: 12/04/2013 Rev.: 01/23/2014

SECTION 2 - - - QUALITY ASSURANCE

PRE-JOB INSPECTION

When recovering an existing roofing system, the authorized Duro-Last contractor is responsible to conduct an inspection of the proposed job site roof conditions to determine the needed fastener type and length, evaluate the moisture content of the existing roofing system, and to note damaged areas to be repaired prior to installation of the Duro-Last roofing system.

CORE CUTS

1. The Duro-Last contractor is responsible for performing a series of core cuts to determine and verify the above information. The Duro-Last contractor and/or building owner is responsible for the repair of all core cuts.
2. Duro-Last, Inc. does not approve the practice of roofing over existing roofing systems that contain excess moisture. Excess moisture is defined as water observed within a core cut or water squeezed from the core sample taken.
3. Duro-Last's post-installation warranty inspection does not check the moisture content of the substrate.

PULLOUT TESTS

1. Fastener pullout tests must be conducted on the roof deck with approved fasteners to verify the integrity of the deck and to establish fastening patterns that meet the requirements of Duro-Last specifications. Contact the Duro-Last Engineering Services Department with any questions.
2. It is the responsibility of the Duro-Last contractor to make sure pullout tests are performed on site. The tests can be performed by either the fastener manufacturer or the authorized Duro-Last contractor. The sections of decking where integrity is in question should be the locations for the tests. The pullout tests must be documented on a roof drawing showing the location and pullout value of each test. In situations where new construction prevents on-site pullout tests, a pre-assembled deck representing the proposed deck type should be constructed and tested.
3. The number of pullout tests required will be as follows: perform a minimum of 10 tests for up to 50,000 ft^2 and five additional pull tests for each additional 50,000 ft^2 or portion thereof, on each project. Areas of low pullout results will require additional pullout tests.
4. It is the responsibility of the Duro-Last contractor to verify pullout values prior to installation.

FASTENER SELECTION AND DECK TYPES

The fasteners used to attach insulation, recover board and Duro-Last membrane must be supplied by Duro-Last, Inc. The following tables summarize the appropriate fasteners to use for different deck types and system components. If a fastener type is needed that is not listed below, the Duro-Last Engineering Services Department must approve its use, in writing, prior to installation.

PLATE SELECTION

When determining which plates to use and where to use them, refer to this table.

	2-inch Poly-Plate	2.4-inch Cleat Metal Plate	3-inch Square Metal Plate	Insulation Plate
Membrane Fastening				
Fastening Tabs	Yes	Yes	No*	No
Parapet Flashings	Yes	Yes	Yes	No
Base of Walls/Penetrations	Yes	Yes	Yes	No
Insulation Boards	Yes	Yes	Yes	Yes
Cover Boards	Yes	Yes	Yes	No

* Allowed by deviation only or on the Duro-Roof system.

Duro-Last, Roof Trak and "World's Best Roof" are registered marks owned by Duro-Last, Inc. Created: 12/04/2013 Rev.: 01/23/2014

FASTENER SELECTION BASED ON DECK TYPE

When determining which fastener type to use for a specific deck type, refer to this table. Note that pullout tests must be performed on each deck and that fastener spacing must be determined based on the "Fastener Spacing Tables" on the following page. If the minimum pullout values required cannot be achieved contact the Duro-Last Engineering Services Department for assistance.

Deck Type	Fastener Type	Notes
Steel	Duro-Last HD Screws Duro-Last XHD Screws	Must penetrate a minimum of 1 inch from the top surface of deck.
Wood	Duro-Last HD Screws Duro-Last XHD Screws	Must penetrate a minimum of 1 inch from the top surface of deck.
Structural Concrete	Duro-Last Concrete Nail Duro-Last Concrete Screw Duro-Last HD Screws Duro-Last XHD Screws	Must penetrate a minimum of 1 inch from the top surface of deck. Pre-drill a minimum of 1/2 inch deeper than the required depth of the fasteners using a 3/16-inch bit.
Gypsum	Auger Fastener* Liquid Auger Fastener**	Minimum pullout requirements must be met. See "Fastener Spacing Tables", page 7.
		Pre-drill required for auger fasteners. Use a 7/16 – 9/16-inch bit.
		* Must penetrate a minimum of 1-1/2 inches from the top surface of deck. * Factory Mutual designed systems require minimum of 2-inch penetration.
		** Liquid Augers must penetrate a minimum of 2 inches from the top surface of the deck.
Cementitious Wood Fiber (Tectum)	Auger Fastener* Liquid Auger Fastener**	Minimum pullout requirements must be met. See "Fastener Spacing Tables", page 7.
		Do not pre-drill.
		* Must penetrate a minimum of 1-1/2 inches from the top surface of deck. * Factory Mutual designed systems require minimum of 2-inch penetration.
		** Liquid Auger must penetrate a minimum of 2 inches beyond the top surface of the deck.
Lightweight Concrete	Auger Fastener* Liquid Auger Fastener** Duro-Last Concrete Screw Duro-Last Concrete Nail Duro-Last HD Screws Duro-Last XHD Screws	Minimum pullout requirements must be met. See "Fastener Spacing Tables", page 7.
		Pre-drill required. Augers: Use a 7/16 – 9/16-inch bit. Others: Use a 3/16-inch bit.
		* Must penetrate a minimum of 1-1/2 inches from the top surface of deck. * Factory Mutual designed systems require minimum of 2-inch penetration.
		** Liquid Auger must penetrate a minimum of 2 inches from the top surface of the deck.
Walls and Curbs	**Fastener Type**	**Notes**
Cinder and Concrete Block	Zinc Plated Metal Anchors Duro-Last Concrete Screw Duro-Last Concrete Nail Duro-Last HD Screws Duro-Last XHD Screws	Must penetrate a minimum of 1 inch from the top surface. Pre-drill a minimum of 1/2 inch deeper than the required depth of the fasteners using a 3/16-inch bit (1/2-inch for metal anchors).

Duro-Last, Roof Trak and "World's Best Roof" are registered marks owned by Duro-Last, Inc.

Created: 12/04/2013 Rev.: 01/23/2014

FASTENER SPACING TABLES* – FOR USE WITH ALL DECK TYPES

60 psf System Design Table (Field Area Only)	Fastener Pullout Resistance		Fastener Spacing Along Laps					
			120-inch Lap Spacing		60-inch Lap Spacing		28-inch Lap Spacing	
	lb.	N	in.	mm	in.	mm	in.	mm
	450	2000	9	230	18	457	24	610
	375	1670	6	230	15	380	18	455
	350	1550	6	150	15	380	18	455
	325	1445	6	150	12	305	18	455
	300	1330	6	150	12	305	18	455
	275	1220	N.A.		12	305	18	455
	225	1000	N.A.		9	230	18	455
	210	930	N.A.		6	150	18	455
	175	780	N.A.		6	150	15	380
	150	665	N.A.		6	150	15	380
	140	620	N.A.		N.A.		12	305
	Less than 140 (620)		N.A.		N.A.		N.A.	

90 psf System Design Table (Field Area Only)	Fastener Pullout Resistance		Fastener Spacing Along Laps					
			120-inch Lap Spacing		60-inch Lap Spacing		28-inch Lap Spacing	
	lb.	N	in.	mm	in.	mm	in.	mm
	450	2000	6	230	12	305	18	455
	375	1670	N.A.		9	230	18	455
	350	1550	N.A.		6	150	18	455
	325	1445	N.A.		6	150	18	455
	300	1330	N.A.		6	150	15	380
	275	1220	N.A.		6	150	15	380
	225	1000	N.A.		6	150	18	455
	210	930	N.A.		N.A.		12	305
	175	780	N.A.		N.A.		9	230
	Less than 175 (780)		N.A.		N.A.		N.A.	

Pullout values greater than 450 lbs can only be used with the Duro-Roof system.

1. For buildings 40 ft. or taller and/or located within high wind zones (greater than 110 mph) or special wind regions:
   a. The Duro-Last Engineering Services department should be involved in determining the fastening requirements. The ASCE 7 Specification will be used to determine the fastening requirements. When appropriate, specifications set forth by entities such as FM Global, SPRI or State / Local Agencies will be utilized.
   b. Fastening tab spacing may not exceed 60 inches on center unless approved, in writing, by the Duro-Last Engineering Services department.

The tables to the left indicate the membrane fastening within the FIELD AREA only. Membrane attachment on Duro-Last designed roof systems, buildings in special wind regions or those 40 feet or taller, and all Factory Mutual-insured buildings will require special field, perimeter, and corner fastening.

The width of the perimeter area is determined by the either the lesser of 40% of the building height at the eaves or 10% of the overall plan width of the building and/or roof area. The perimeter must never be less than 5 feet wide.

Contact the Duro-Last Engineering Services department for additional information.

Duro-Last, Roof Trak and "World's Best Roof" are registered marks owned by Duro-Last, Inc.

Created: 12/04/2013 Rev.: 01/23/2014

SECTION 3 - - - IMPLEMENTATION

ROOF PREPARATION

RECOVER – Built-up Roofs (BUR)

a. If the BUR is gravel surfaced and the pea gravel or crushed stone is 1/4 – 3/8-inch in size, it must be leveled and maintained at 4 lb/ft^2. A minimum 3/8-inch fan fold recover board, supplied by Duro-Last, approved recover board, or 1 inch thick insulation must be used to overlay the gravel.

b. If the loose stone on an old BUR is vacuumed or swept, a minimum 3/8-inch fan fold board, supplied by Duro-Last, approved recover board, or 1 inch thick insulation must be used to overlay the existing system. CAUTION: Removing more than the loose gravel may affect the fire rating. Contact the Duro-Last Engineering Services Department for assistance regarding fire rated assemblies.

c. If the BUR is a smooth or granular surfaced application, and is free of sharp edges and debris, it can be recovered with an approved slip sheet, although Duro-Last fan fold board is recommended.

d. EPS insulation cannot be used over coal tar pitch or asphalt without a slip sheet between the coal tar pitch and the insulation as well as between the membrane and the insulation. Duro-Last underlayments are approved for direct application over aged coal tar pitch roofs.

e. When roofing over asphalt or coal tar roofs (including tear-off), an approved separator sheet must be used. Asphalt-based products are incompatible with the Duro-Last roofing membrane. Note: Should the Duro-Last membrane become soiled with roofing asphalt, the affected membrane must be cleaned immediately using approved cleaners and procedures. If the asphalt cannot be properly cleaned from the membrane, the affected membrane must be removed and new membrane installed, or overlay the affected area with an approved slip sheet and new membrane. Extreme caution should be taken if you are doing a tear-off while installing the membrane.

RECOVER – Single-Ply Roofs

a. The existing single-ply roofing membrane must be cut free from the entire roof perimeter, cut free around all penetrations, and cut in between fastener rows prior to the installation of the Duro-Last membrane. When reroofing after a tear-off, caution should be used to prevent the Duro-Last membrane from contacting incompatible materials. (See "Substrate Separation", page 4)

b. If the existing system is mechanically fastened, there is often a problem with loose fasteners. Because of this problem, cut the membrane open and remove all loose fasteners before installing the slip sheet.

c. If a PVC membrane has been installed directly over styrene insulation without a separation sheet, then the old membrane must be removed, damaged insulation replaced, and an approved slip sheet installed.

d. If the existing membrane is ballasted and the Duro-Last membrane is to be mechanically fastened, it is necessary to do fastener pullout tests on the deck. Also, the type of insulation and its density needs to be determined to ensure that the insulation will meet the Duro-Last specification (See "Substrate Separation", page 4). Be aware that if the existing insulation is "loose-laid" it must be fastened with an approved fastening pattern (See Detail 1020).

RECOVER – Metal Roof Recover/Retrofit

a. The metal roof panel must be clean, smooth, and free of sharp edges and loose foreign material. Damaged areas and other factors affecting the installation of the Duro-Last roofing system must be repaired prior to the installation of the membrane.

b. A metal roof panel must be separated from the Duro-Last membrane by using a recover board of at least 7/16-inch hardboard (gypsum), plywood, or oriented strand board (OSB) or 1-inch rigid insulation. When 1-inch rigid insulation is used, flute filler must be used and must consist of polyisocyanurate insulation. Note: According to International Building Code (IBC), the use of above-deck thermal insulation (including extruded or expanded EPS) is covered with an approved roof covering and passes the tests of FM 4450 or UL 1256 when tested as an assembly. The gaps between the ribs of the metal and the insulation fill cannot exceed the recover board manufacturer's recommendation for spanability. Flute filler must be fastened as needed to hold it in place. (Note: Duro-Last fanfold may be used if the flutes are filled with no gaps exceeding 1/4 inch total in between metal ribs.)

Duro-Last, Roof Trak and "World's Best Roof" are registered marks owned by Duro-Last, Inc. Created: 12/04/2013 Rev.: 01/23/2014

c. Insulation/recover board must be neatly fitted to the roof deck and its penetrations. 4 x 8-ft. boards must be attached with a minimum of 5 fasteners/distribution plates. See details 1020 & 1030 found in the detail section of this manual for mechanical attachment of additional sizes of recovery boards. Gaps between insulation/recovery boards cannot exceed 1/4 inch in width. No more insulation/recovery board will be installed than can be covered with membrane and completed before the end of the day's work or before the onset of inclement weather. Duro-Last fasteners and plates as well as approved fastening patterns are required for attachment of all insulation/recover board. Contact the Duro-Last Engineering Services Department with any questions.

d. High-density wood fiberboard is acceptable on metal building recovers when the building slope is at least 1 inch vertically for every 12 inches horizontally. High-density wood fiber will not be accepted as flute filler.

e. Plywood is acceptable to recover metal roofs. The minimum thickness, if it is being used as recover board, shall be 7/16 inch. Fasteners must penetrate through both the plywood and the existing metal roof.

f. If plywood will be acting as the new substrate for membrane attachment, the plywood must be a minimum of 9/16 inch thick and a pull-test must be conducted on the new lumber to determine the proper lap spacing and attachment along the tab. Contact the local building authority to determine compliance of deck attachment to the building structure. Note: It is the responsibility of the contractor to ensure that the weight requirements of the building are not exceeded when installing additional materials over pre-engineered buildings.

NEW CONSTRUCTION

a. All concrete surfaces must be troweled smooth. If the concrete surface is not smooth, a minimum 3/8-inch fan fold board, supplied by Duro-Last, is required.

b. The roof deck or existing roof system must be clean, smooth, free of sharp edges, and loose foreign material. Damaged areas and other factors affecting the installation of the Duro-Last roofing system must be repaired prior to the installation of the membrane.

c. A metal deck must be separated from the Duro-Last membrane by at least 7/16-inch hardboard (gypsum, plywood, or oriented strand board) or 1-inch rigid insulation. It is the responsibility of the contractor to ensure that the selected insulation is adequate to span the flutes of the deck. If it is not, the flutes must be filled with an approved insulation. See "Insulation Selection and Installation" for further details.

d. All plywood surfaces must be smooth and free of all foreign material. Gaps between sheets of plywood should not exceed 1/4 inch. Prior to the installation of the membrane an approved slip sheet or duct tape must be installed over any H-clips if they are used on any plywood decking.

INSTALLATION

WOOD NAILER

Wood nailers must be a #2 grade lumber, or better and must be fastened to the deck, wall or existing secured nailer in such a manner that they resist 180 lb of force per linear ft. of nailer in any direction. Fasteners used to attach wood nailers must be spaced no greater than 18 inches apart. Wood nailers are required in any situation where 1 inch or greater of insulation is added to the roof perimeter edge. The top of the nailers must be flush with the top of the insulation. Wood nailers are not required at a change of plane such as the intersection between a parapet wall and the decking.

Duro-Last Engineering Services requires that for nailers and other lumber supports identified as ACQ or CA treated, only stainless steel fasteners be used. Additionally, for all new construction, untreated lumber should be used for nailers with standard e-coated fasteners. Further, treated lumber dating 2003 or earlier is acceptable for use with e-coated fasteners as lumber prior to 2003 of age is unlikely to contain the copper based treatments.

Duro-Last, Roof Trak and "World's Best Roof" are registered marks owned by Duro-Last, Inc. Created: 12/04/2013 Rev.: 01/23/2014

INSULATION SELECTION AND INSTALLATION

Insulation products must be neatly fitted to the roof deck and its penetrations. 4 x 8-ft. insulation boards must have a minimum of 5 fasteners/distribution plates installed per board. No gap should exceed ¼ inch in width. No more insulation products should be installed than can be covered with membrane and completed before the end of the day's work or before the onset of inclement weather. Duro-Last fasteners and Duro-Last plates as well as approved fastening patterns are required for attachment of all insulation products.

The minimum compression characteristics of insulation products as determined by ASTM D-1621 will be as follows:

- Polyisocyanurate products: 20 psi
- Fiberglass products: 16 psi
- Extruded polystyrene products: 25 psi
- Expanded polystyrene products: 15 psi and 1.5 pcf density (certified) and a minimum 1 inch thick.
- Expanded polystyrene products covered with or laminated to a hardboard facer: 12 psi and 1.25 pcf densities and a minimum of 1 inch thick.

PERIMETER MEMBRANE INSTALLATION

a. The first fastening tab on all perimeter roof sections that have tabs parallel with the roof edge or parapet wall must be between 24 – 36 inches from the edge or the wall. If the parapet wall is greater than 24 inches tall, the perimeter tab may be placed up to 63 inches away from the roof edge when utilizing roof sections with maximum lap spacing of 60 inches on center.

b. When using roof sections with fastening tabs spaced 120 inches, the first tab along <u>all</u> perimeter roof edges must be located 24 – 36 inches from the edge. The second tab must be placed 84 – 96 inches from the edge. Parapet wall height does not change this requirement.

c. On buildings with multiple roof levels, treat all roof edges as perimeter edges if they stand 3 ft. or more above adjacent or surrounding roof areas.

d. On buildings located in high wind zones (greater than 110 mph) or on structures that are 40 feet or taller, additional wind tabs and/or increased fastener density may be required. Contact the Duro-Last Engineering Services department for assistance.

MEMBRANE INSTALLATION

a. The prefabricated roof section is unrolled and positioned on the deck to expose the first securement tab. The securement tab is mechanically fastened to the deck with approved fasteners and stress distribution plates (see "Fastener Selection and Deck Types", page 6). The roof section is then unfolded and pulled taut to remove any wrinkles exposing the second securement tab. This process is repeated until the entire roof section has been mechanically fastened to the deck, including all securement tabs and edges. The next section of roofing membrane is then positioned to provide a minimum of 6 inches overlap. The above procedure is repeated for each roof section.

b. The edge of the stress distribution plate must be installed flush with the outside edge of a fastening tab.

c. The maximum fastener spacing is 18 inches on center in rows 60 inches apart. For tab spacing greater than 60 inches, the maximum fastener spacing is 12 inches on center. (Refer to the Fastener Spacing Table, page 7.)

d. When installing membrane, ensure that the appropriate side of the membrane is exposed to elements. For white and gray membrane, the smooth side should be exposed. On the tan membrane, it will be the embossed side of the membrane that should be exposed.

e. If the membrane is attached to the support structure beneath the roof deck, special precautions must be taken. If the membrane is attached to a steel purlin structure, all fasteners must penetrate a minimum of 1-3/4 inches from the top of the purlin using Duro-Last purlin fasteners. If the membrane is being attached to a wood truss structure, all fasteners must penetrate a minimum of 1 inch from the top surface of the truss with approved Duro-Last fasteners.

Duro-Last, Roof Trak and "World's Best Roof" are registered marks owned by Duro-Last, Inc. Created: 12/04/2013 Rev.: 01/23/2014

HOT-AIR WELDING

a. Position the membrane so that the top membrane overlaps the bottom membrane a minimum of 6 inches. Ensure the welding area is dry, clean and free of foreign material.

b. Weld the top membrane to the bottom membrane using a hand-held welder or an automatic welding machine, and silicone roller. A minimum 1-1/2-inch wide continuous weld is required.

c. All field-welded seams must be inspected with a tack claw or similar tool (cotter key extractor), and all deficiencies repaired prior to inspection by Duro-Last.

ROOF PENETRATIONS

a. The Duro-Last membrane must be fastened at the base of all roof penetrations. Such penetrations include, but are not limited to, pipes, drains, curbs, pitch pans, and expansion joints.

b. The fastener spacing around penetrations shall be the same as that being used to fasten the roof membrane adjacent to the penetration. A minimum of one fastener is required.

FLASHINGS

a. The Duro-Last membrane must not contact surfaces which maintain or exceed temperatures of 120° F including all insulated chimney pipes, exhaust pipes, and combustible fuel pipes.

b. All flashings, with the exception of pitch pans, must be terminated at a minimum of 8 inches above the roof surface. See “Pitch Pans” section for pitch pan installation criteria.

c. See “Mechanically Fastened” details section for installation references.

PITCH PANS

a. Use pitch pans only when standard Duro-Last flashings cannot be used.

b. Only Duro-Last Duro-Caulk Plus or approved sealer may be used when creating a pitch pan.

c. All pitch pans must be terminated at a minimum of 4 inches above the roof surface.

d. See Details 4030, 4040 and 4045 for installation references.

TWO WAY AIR VENTS

a. Install Duro-Last Two-Way Air Vents following these guidelines:

   1. Install at a rate of one vent for every 1,000 ft^2 of deck area.
   2. Do not install the vents near drains or in valleys.
   3. Evenly space the vents across the roof area and center them between fastening tabs.

b. It is the contractor’s responsibility to ensure that adequate secondary drainage exists to prevent flooding during extreme weather when water could infiltrate the two-way vent.

c. See Detail 5020 for installation references.

ROOF DRAINS AND SCUPPERS

a. Drain Assemblies with Clamping Rings

   1. All existing roofing materials must be removed from drain bowl and clamping ring.
   2. Use Duro-Caulk Plus between the membrane and clamping ring (1/2 tube minimum).
   3. After the Duro-Last membrane is properly installed onto the bowl and the clamping ring set in place, all bolts securing the ring must be installed to provide constant, even compression on the sealant. If bolts are broken or missing, replacements must be installed.

b. Duro-Last Drain Boots

   1. If the Duro-Last drain boot is to be used, apply 1/2 tube of sealant (minimum) to the outside of the drain boot and insert it into the drain.
   2. Install composite compression drain rings as low into the drain as possible.

Duro-Last, Roof Trak and “World’s Best Roof” are registered marks owned by Duro-Last, Inc. Created: 12/04/2013 Rev.: 01/23/2014

c. See Details 2011, 2020, 2021, 2025, 2030, 2041, 2050, 2060, 2061, 2070 and 2071 for installation references.

EXPANSION JOINTS

a. See Details 1140, 1150, 1160, 1170 and 6160 for installation references.

WALKWAY PADS

a. Duro-Last Roof Trak® III Walkway Pad is recommended at all roof access points, service units and high traffic areas. The risk of potential third party damage to the Duro-Last roofing system may increase should the building owner choose not to utilize the Duro-Last Roof Trak III Walkway Pad. Note: Prior to inspection of the installation by Duro-Last, attach only one side of any Walkway Pads that will be covering any field seams. This will allow the Duro-Last Technical Representative to inspect the entire field seam. After the inspection, hot-air weld the remaining side to complete the attachment of the pad.

CAUTIONS AND WARNINGS

1. Duro-Last Roofing, Inc. is not responsible for damage that may occur as a result of moisture created from condensation occurring within or beneath a roof deck subassembly or building.
2. Duro-Last recommends the use of vapor barriers, however it is the responsibility of the Duro-Last contractor of record to ensure that all applicable specifications, building codes, regulations and ordinances are complied with and followed. A roofing professional, such as a consultant or architect, should be utilized for correct roof system design prior to installing any roof system.
3. All Polystyrene insulation (Styrofoam, Formular, Dow, EPS, etc. - blue, white, gray, green, or pink) must have an approved non-styrene facer or an approved slip sheet covering when installed in direct contact with existing or new PVC membranes. Polyethylene or polypropylene facers are acceptable only after testing, and approval by Duro-Last for compatibility.
4. Phenolic foam is not an approved insulation in new construction or re-roofing applications. The Duro-Last roofing system may not, under any circumstance, be installed over phenolic foam.
5. Perlite and wood/mineral fiber-boards are not acceptable substrates for the Duro-Last membrane. (See #5 below for exception on wood fiber board)
6. High density wood fiber boards are only acceptable on a metal roof that is being retrofitted where the slope of the roof will be 1 inch per 12 inches or greater.
7. If asbestos is encountered, the building owner must be notified at once. The owner is solely responsible for determining the proper course of action.
8. A Duro-Last roof shall not be installed over areas of roofs if one or more of the following conditions exist:
    a. The building structure is not sufficient to handle the load of the completed system.
    b. It is not possible to find an approved fastener that will properly hold in the substrate.
    c. Roofs are subject to hot embers, slag, or burning debris.
    d. Incompatible chemicals exhausted directly onto the roof or may come in contact with the roof in liquid form. (See “Chemical Resistance”, page 4.)
    e. Steam is exhausted directly onto the roof that is in excess of 120º F.

Duro-Last, Roof Trak and “World’s Best Roof” are registered marks owned by Duro-Last, Inc. Created: 12/04/2013 Rev.: 01/23/2014

SECTION 09 30 00 - TILE

PART 1 GENERAL

1.1 SUMMARY

A. Section includes ceramic, ceramic mosaic, quarry, paver, porcelain, and glass tile for interior floor and wall applications; tile stair treads; cementitious backer board as tile substrate; and thresholds at door openings.

1.2 SUBMITTALS

A. Shop Drawings: Indicate patterned applications and thresholds.

B. Product Data: Submit instructions for using grouts and adhesives.

C. Samples: Submit two samples of each type of product to be used.

1.3 CLOSEOUT SUBMITTALS

A. Operation and Maintenance Data: Submit recommended cleaning methods, cleaning materials, stain removal methods, and polishes and waxes.

1.4 QUALITY ASSURANCE

A. Perform Work in accordance with TCA Handbook and ANSI A108.1 Series/A118.1 Series.

B. Installer: Company specializing in performing Work of this section with minimum three years experience.

1.5 ENVIRONMENTAL REQUIREMENTS

A. Do not install adhesives in unventilated environment.

B. Maintain ambient and substrate temperature of 50 degrees F during installation of mortar materials.

PART 2 PRODUCTS

2.1 TILE

A. Manufacturers:
   1. Manufacturer: Dal Tile – Colobody Porcelain: Plaza Nova in Gray Fog (PN98) with 12” x 24” running bond pattern.

2.2 COMPONENTS

A. Grout Materials:

1. Standard Grout: Commercial Portland cement type as Latex-Portland cement type as specified in ANSI A118.6; black color.
2. Silicone Rubber Grout: Silicone sealant, moisture and mildew resistant type, complying with ANSI A118.6, color as selected ; use for shower floors and walls.

B. Cementitious Backer Board: ANSI A118.9; High density, glass fiber reinforced, 5/8 inch thick; 2 inch wide coated glass fiber tape for joints and corners; manufactured by United States Gypsum Co.

C. Thresholds and Tile Floor Edging: Schluter Schiene, aluminum finish.

PART 3 EXECUTION

3.1 EXAMINATION

A. Verify surfaces are ready to receive work.

3.2 PREPARATION

A. Install cementitious backer board. Tape joints and corners, cover with skim coat of dry-set mortar to feather edge.

3.3 INSTALLATION

A. Install tile, thresholds, tile floor edging, and grout in accordance with applicable requirements of ANSI A108.1 through A108.10, and TCA Handbook recommendations.

B. Cut and fit tile to penetrations through tile, leaving sealant joint space. Form corners and bases neatly. Align floor, base and wall joints.

C. Place tile joints uniform in width, subject to variance in tolerance allowed in tile size. Make joints watertight, without voids, cracks, excess mortar, or excess grout.

D. Grout tile joints. Use standard grout unless otherwise indicated.

E. Floors:
1. Over interior concrete substrates, install in accordance with TCA Handbook Method F113, dry-set or latex-portland cement bond coat, with standard grout, unless otherwise indicated.
   a. Where waterproofing membrane is indicated, install in accordance with TCA Handbook Method F122, with latex-portland cement grout.
2. Over wood substrates, install in accordance with TCA Handbook Method F142, with standard grout.

F. Wall Tile:
   1. Over cementitious backer units install in accordance with TCA Handbook Method W244, using membrane at toilet rooms, kitchens, and locker rooms.
   2. Over gypsum wallboard on wood or metal studs install in accordance with TCA Handbook Method W243, thin-set with dry-set or latex-portland cement bond coat, unless otherwise indicated.
   3. Over interior concrete and masonry install in accordance with TCA Handbook Method W202, thin-set with dry-set or latex-portland cement bond coat.

END OF SECTION

SECTION 09 51 23 - ACOUSTICAL TILE CEILINGS

(The following specification is specific to the Meeting Space ceiling system.)

PART 1 GENERAL

1.1 SUMMARY

A. Section includes suspended metal grid ceiling system; and acoustic tile.

1.2 SYSTEM DESCRIPTION

A. Provide system capable of supporting imposed loads with deflection limited to 1: 360.

B. Installed System: Conform to UL rating for ceiling and floor assembly; seismic restrained.

C. Conform to applicable code for fire rated assembly.

1.3 SUBMITTALS

A. Product Data: Submit manufacturer's product data.

B. Samples: Submit ceiling tile and suspension.

1.4 QUALITY ASSURANCE

A. Installer: Company specializing in performing Work of this section with minimum three years experience.

1.5 ENVIRONMENTAL REQUIREMENTS

A. Maintain uniform temperature of minimum 60 degrees F, and maximum humidity acoustic unit installation.

PART 2 PRODUCTS

2.1 SUSPENDED ACOUSTICAL CEILINGS

A. Manufacturers:
1. United States Gypsum, Millennia Acoustical Panels, ClimaPlus Performance, SLT Edge Profile, Model No. 76705, paint black
2. Substitutions: May be permitted with prior approval of architect.

2.2 COMPONENTS

A. Grid:
1. Non-Fire Rated Grid: Donn DX-DXL 15/16” exposed, black finish.
2. Fire Rated Grid: Donn DX-DXL 15/16” exposed, black finish.

1. Accessories: Stabilizer bars, clips, splices, and hold down clips required for suspended grid system.
2. Grid Finish: paint Black.
3. Support Channels and Hangers: Galvanized steel, size and type to suit application and ceiling system flatness requirements specified.
4. Seismic Hangers: Galvanized steel compression struts: Donn Corporation Series VSA or equal, size and type to suit seismic requirements.
5. Axiom Trim. Manufacturer: United States Gypsum, 10" Compasso Standard, or approved equal by Architect. Paint black.

2.3 ACCESSORIES

A. Acoustic Sealant for Perimeter Moldings: Specified in Section 07900.

PART 3 EXECUTION

3.1 EXAMINATION

A. Verify layout of hangers does not interfere with other work.

3.2 INSTALLATION

A. Suspension System:
1. Install system in accordance with ASTM C636.
2. Coordinate location of hangers with other work. Where components prevent regular spacing of hangers, reinforce system to span extra distance.
3. Hang system independent of walls, columns, ducts, pipes and conduit.
4. Center system on room axis leaving equal border units.
5. Install edge molding at intersection of ceiling and vertical surfaces, using longest practical lengths.

B. Acoustic Units:
1. Install acoustic units level, free from damage, twist, warp or dents.
2. Lay directional patterned units one way with pattern parallel to longest room axis.
3. Lay acoustic insulation above acoustic units for distance of 48 inches on both sides of acoustic partitions.

C. Fire Rate Acoustic Units:
1. Install hold down clips to retain panels tight to grid system within 20 ft of exterior doors.
2. Install light fixture boxes constructed of gypsum board above light fixtures in accordance with UL assembly requirements.

D. Tolerances: Variation from Flat and Level Surface: 1/8 inch in 10 feet.

END OF SECTION

SECTION 09 65 00 - RESILIENT FLOORING

PART 1 GENERAL

1.1 SUMMARY

A. Section includes resilient sheet and tile flooring and base and resilient stair nosings, treads, and risers.

1.2 SYSTEM DESCRIPTION

A. Resilient Flooring: Conform to applicable code for flame/smoke rating requirements of 75/450 in accordance with ASTM E84 and critical radiant flux (CRF) of 0.45 in accordance with ASTM E648.

1.3 SUBMITTALS

A. Product Data: Submit manufacturer’s product data.

B. Samples:
1. Submit manufacturer's complete set of color samples for initial selection.

1.4 CLOSEOUT SUBMITTALS

A. Operation and Maintenance Data: Submit maintenance instruction and data.

1.5 QUALITY ASSURANCE

A. Installer: Company specializing in performing Work of this section with minimum three years experience approved by manufacturer.

1.6 ENVIRONMENTAL REQUIREMENTS

A. Maintain temperature in storage area between 55 degrees F and 90 degrees F.

B. Store materials for not less than 48 hours prior to installation in area of installation at temperature of 70 degrees F to achieve temperature stability. Thereafter, maintain conditions above 55 degrees F.

PART 2 PRODUCTS

2.1 RESILIENT BASE

A. Manufacturers:
1. Burke
2. Substitutions: May be permitted with prior approval of architect.

B. Base: ASTM F1861 Vinyl; top set coved:
1. Height: 4 inch.
2. Thickness: 0.125 inch thick.
3. Finish: Grey 204.
4. Length: 10 foot rolls.

PART 3 EXECUTION

3.1 EXAMINATION

A. Verify concrete floors are dry to maximum moisture content as recommended by manufacturer, and exhibit negative alkalinity, carbonization, and dusting.

3.2 PREPARATION

A. Clean substrate.

B. Fill minor low spots and other defects with sub-floor filler.

C. Apply primer as required to prevent "bleed-thru" or interference with adhesion by substances that cannot be removed.

3.3 INSTALLATION

A. Scribe flooring to produce tight joints at items penetrating flooring.

B. Where floor finishes are different on opposite sides of door, terminate flooring under centerline of door.

C. Install edge strips at unprotected or exposed edges, where flooring terminates, and where indicated. Secure resilient strips by adhesive.

D. Adhere base tight to wall and floor surfaces.

E. Fit joints tightly and make vertical. Miter internal corners. At external corners, V cut back of base strip to 2/3 of its thickness and fold.

3.4 CLEANING

A. Remove excess adhesive from surfaces without damage.

END OF SECTION

SECTION 10 28 00 - TOILET, BATH, AND LAUNDRY ACCESSORIES

PART 1 GENERAL

1.1 SUMMARY

A. Section Includes:
   1. Toilet and washroom accessories.

1.2 SUBMITTALS

A. Product Data: Accessories, describing size, finish, details of function, and attachment methods.

B. Samples: Submit brochure illustrating color, texture, and finish choices.

PART 2 PRODUCTS

2.1 TOILET AND BATH ACCESSORIES

A. Manufacturers:
   1. Bobrick Washroom Accessories
   2. Substitutions: may be permitted with prior approval of Architect.

B. Performance and Design Criteria: Design grab bars and attachments to resist forces as required by applicable code.

2.2 TOILET ROOM ACCESSORIES

A. Types of accessories required are listed in schedule located in ATTACHMENTS Article at end of this Section.

B. Manufacturer's name or model numbers as listed serve as a basis of design for product features, functions, and general appearance.

PART 3 EXECUTION

3.1 EXAMINATION

A. Verify:
   1. Exact location of accessories for installation.
   2. Field measurements and rough-in dimensions for recessed accessories are as instructed by manufacturer.

B. Install necessary blocking, reinforcing plates, and concealed anchors in walls.

3.2 PREPARATION

A. Deliver inserts and rough-in frames to Site for timely installation.

B. Provide templates and rough-in measurements as required.

3.3 INSTALLATION

A. Do not install accessories until after completion of all finishes to adjacent wall and ceiling surfaces.

B. Install plumb and level, securely and rigidly anchored to substrate.

C. Turn over to Owner all keys and special tools required for lockable or secured accessories.

D. Mounting Heights and Locations: As required by accessibility regulations, as indicated on Drawings, and as follows:
   1. Bottom of Mirrors: 40 inches maximum.
   2. Grab Bars at Barrier-Free Stalls: 36 inches, maximum, to center of grab bar.
   3. Toilet Paper Holders: 26 inches, maximum, to bottom of holder.
   4. Paper Towel and Soap Dispensers: 42 inches, maximum, to bottom of dispenser.

3.4 CLEANING

A. Clean mirrors and exposed surfaces using procedures as recommended by accessory manufacturer.

3.5 ATTACHMENTS

A. These accessories shall be located in ALL ADA single toilet, toilet rooms. Provide quantities based on Schedule below for each room.
   1. Side Grab Bars; Quantity One; Bar shall be 42” long, Bobrick B-5806x42
   2. Rear Grab Bars; Quantity One; Bar shall be 36” long, Bobrick B-5806x36
   3. Vertical Grab Bars; Quantity One; Bar shall be 18” long, Bobrick B-5806x18

B. These accessories shall be located in ALL interior restrooms. Provide quantities based on Schedule below for each room.
   1. Side Grab Bars; Quantity One per ADA Stall; Bar shall be 42” long, Bobrick B-5806x42
   2. Rear Grab Bars; Quantity One per ADA Stall; Bar shall be 36” long, Bobrick B-5806x36
   3. Vertical Grab Bars; Quantity One per ADA Stall; Bar shall be 18” long, Bobrick B-5806x18
   4. Mirror; Quantity Three per Restroom; Restoration Hardware: Marseilles Mirror, 35 3/4" W X 3" D X 48" H, Black Finish
   5. Paper Towel and Waste Receptacle Combination; Quantity One; Bobrick B-3942
   6. Sanitary Napkin (Women’s Only); Quantity One Per Stall, B-270
   7. Toilet Tissue Dispensers; Quantity One Per Stall, B-2888
   8. Baby Changing Station; Quantity One, KB110-SSRE
   9. Lavatory Mounted Soap Dispenser; Quantity Three per Restroom; Bobrick B-922
   10. Clothes Hook; Quantity per number of toilet stalls; Bobrick B-2116

C. These accessories shall be located in ALL exterior restrooms. Provide quantities based on Schedule below for each room.
   1. Side Grab Bars; Quantity One per ADA Washroom; Bar shall be 42” long, Bobrick B-5806x42
   2. Front Grab Bars; Quantity One Per ADA Washroom; Bar shall be 24” long, Bobrick B-5806x24
   3. Vertical Grab Bars; Quantity One per ADA Washroom; Bar shall be 18” long, Bobrick B-5806x18
   4. Mirror; Quantity One; Bobrick B-165 1836
   5. High Speed Hand Dryer; Quantity One; Toto HDR130#SV
   6. Sanitary Napkin (Women’s Only); Quantity One, B-270
   7. Toilet Tissue Dispensers; Quantity One, B-2888
   8. Soap Dispenser; Quantity One; Bobrick B-4412
   9. Clothes Hook; Quantity One; Bobrick B-2116

D. These accessories shall be located at Lounge Space Drink Area. Provide quantities based on Schedule below.
   1. Paper Towel Dispenser; Quantity One; Bobrick B-359
   2. Lavatory Mounted Soap Dispenser; Quantity Three per Restroom; Bobrick B-922

E. These accessories shall be located at Commercial Kitchen hand wash sink. Provide quantities based on Schedule below.
   1. Paper Towel Dispenser; Quantity One; Bobrick B-72974
   2. Soap Dispenser; Quantity One; Bobrick B-4412

END OF SECTION

Please note, the following specifications are per the old CSI Division Section numbering.)

SECTION 02100 - SITE PREPARATION

PART 1 – GENERAL

RELATED DOCUMENTS

Drawings and general provisions of the contract including General and Supplementary Conditions and Division 1 Specification Sections apply to work of this section.

DESCRIPTION OF WORK

Perform site preparation work as shown and specified. Site preparation includes, but is not limited to:

1. Protection of existing trees to remain
2. Removal of trees and other vegetation
3. Stripping and stockpiling of topsoil
4. Clearing and grubbing
5. Removing above grade improvements
6. Removing below grade improvements
7. Installation of erosion control devices

JOB CONDITIONS

Protection of Existing Trees and Vegetation: Protect existing trees and other vegetation indicated to remain in place, against unnecessary cutting, breaking or skinning of roots, skinning and bruising of bark, smothering of trees by stockpiling construction materials or excavated materials within drip line, excess foot or vehicular traffic, or parking of vehicles within drip line. Provide temporary guards to protect trees and vegetation to be left standing. Leave all protection in place and maintain until construction work has been completed and all danger of damage has passed. Protection shall be removed only after approval is given by Architect.

QUALITY ASSURANCE:

The General Contractor shall obtain *(In accordance with Georgia Department Of Natural Resources, Environmental Protection Division, Manual For Erosion and Sediment Control, Admin. Code Chapter 391-3.7)* a storm water permit from the State of Georgia. An NPDES construction site also includes construction sites, irrespective of size, whose stormwater discharges have a reasonable potential to be a significant contributor of pollutants to a water of the State, or whose stormwater discharges have a reasonable potential to cause or contribute to a violation of an applicable

Georgia water quality standard as determined by the Department. The General Contractor shall include in Base Bid all permit fees associated to obtain this permit. The Contractor shall submit a Notice of Registration, the fee and develop a Construction Best Management Practices Plan (CBMPP) prior to construction and shall maintain all erosion control measures until the permit is relinquished.

PART 2 – PRODUCTS

MATERIALS

Silt Fence: Commercially available preassembled silt fence structure consisting of industrial grade polypropylene fence and support netting pre-stapled to poles or silt fence consisting of polypropylene fabric, wire backing, and metal/wood poles separately as acceptable to the Architect. Fabric width shall be a minimum of 24” wide.

PART 3 – EXECUTION

EROSION CONTROL

Prior to the starting of any work, install a silt fence as required in the Best Management Practice Plan. Maintain fence in place during full construction period. Install silt fence in accordance with manufacturer’s recommendations. Inspection of the silt fence shall be daily, and repair or replacement must be made promptly as required. The sediment behind the fence must be removed when it reaches 6” in height. Protection shall be removed only after approval is given by the Architect. Removal of erosion control measures is to be carried out by the Contractor who installed the measures.

SITE CLEARING

General: Remove vegetation, improvements or obstructions interfering with installation of new construction and within limits indicated on the Drawings. Remove all demolished items from the site. Removal includes digging out stumps and roots. Carefully and cleanly cut roots and branches of trees indicated to be left standing where such roots and branches obstruct new construction.

Clearing and Grubbing: Clear site of trees, shrubs and other vegetation, except for those indicated to be left standing. Completely remove stumps, roots and other debris protruding through ground surface. Do not grub inside the drip line of trees to remain. On site burning is not permitted.

Fill depressions caused by clearing and grubbing operations with satisfactory soil material, unless further excavation or earthwork is indicated. Place fill material in horizontal layers not exceeding 8” loose depth and thoroughly compact to a density equal to adjacent original ground.

Positive drainage must be maintained or installed by the Contractor to insure that storm water runoff flows to the proper drainage structure or swale.

Restore all areas disturbed by construction activities and which are outside the limits of clearing as indicated on the drawing to their original condition. The expense for this work will be borne by the contractor. The work must be in accordance with the directions of the Architect.

STRIPPING TOPSOIL

Topsoil is defined as friable clay loam surface soil found in a depth of not less than 4”. Satisfactory topsoil is reasonably free of subsoil, clay lumps, stones and other objects over 2” in diameter, and without weeds, roots and other objectionable material. Strip topsoil to its full depth at all areas to be regraded, resurfaced or paved in a manner to prevent intermingling with underlying subsoil or other objectionable material. Remove heavy growths of grass from areas before stripping. Where trees are indicated to be left standing, stop topsoil stripping at drip line, unless directed otherwise, to prevent damage to main root system. Stockpile topsoil in storage piles in a location acceptable to the Architect. Construct storage piles to freely drain surface water. Cover storage piles if required to prevent wind-blown dust. Maintain topsoil storage piles separate from other stockpiled soil materials.

SITE IMPROVEMENTS

Remove above grade and below grade improvements necessary to permit construction, and other work as indicated. Abandonment or removal of certain underground pipe or conduits are shown on the civil drawings, and is included under work of those sections. Removal of abandoned underground piping or conduit interfering with construction is included under this section.

DISPOSAL OF WASTE MATERIAL

Removal from Owner's Property: Remove waste materials, including unacceptable excavated materials, trash and debris, and legally dispose of it off Owner's property site, in area approved by all local authorities and the Georgia Department Of Natural Resources, Environmental Protection Division.

END OF SECTION 02100

SECTION 02200 – EARTHWORK

PART 1 - GENERAL

RELATED DOCUMENTS:

Drawings and general provisions of Contract including General and Supplementary Conditions and Division 1 Specification sections and report of Geotechnical Exploration at the end of this section.

DESCRIPTION OF WORK:

Extent of earthwork is indicated on drawings.

1. Preparation of subgrade for building slabs and walks is included as part of this work.
2. Drainage fill course for support of building slabs is included as part of this work.

Excavation for Mechanical/Electrical Work: Refer to Division 15 and 16 sections for excavation and backfill required in conjunction with underground mechanical and electrical utilities, and buried mechanical and electrical appurtenances; not work of this section.

Codes and Standards: Perform excavation work in compliance with applicable requirements of governing authorities having jurisdiction and in compliance with the Report of Subsurface Investigation.

Testing and Inspection Service:

The **Owner** will select a firm for soil testing and inspection service for quality control testing during earthwork, and the Owner to pay costs.

Retesting of rejected materials and installed work, shall be done at the Contractor's expense.

Referenced Standards: Where the term "Referenced Standard" is used in these Project Specifications, it shall be interpreted as referring to the current edition of **"Construction Standards and Details latest edition of State of Georgia Department of Transportation"**. Referenced Divisions of the "Standard" are hereby made a part of this Project Specification insofar as they may be termed applicable. In no case will requirements for "Method of Measurement" and "Basis of Payment" be considered as applicable to this Project Specification.

JOB CONDITIONS:

Site Information: Data on indicated subsurface conditions are not intended as representations or warranties of accuracy or continuity between soil bearings. It is expressly understood that Owner will not be responsible for interpretations or conclusions drawn there from by Contractor. Data are made available for convenience of Contractor.

Additional test borings and other exploratory operations may be made by Contractor at no cost to Owner.

Existing Utilities: Locate existing underground utilities in areas of work. If utilities are to remain in place, provide adequate means of support and protection during earthwork operations.

Should uncharted or incorrectly charted, piping or other utilities be encountered during excavation, consult utility Owner immediately for directions. Cooperate with Owner and utility companies in keeping respective services and facilities in operation. Repair damaged utilities to satisfaction of utility owner.

Use of Explosives: The use of explosives is not permitted.

Protect structures, utilities, sidewalks, pavements, and other facilities from damage caused by settlement, lateral movement, undermining, washout and other hazards created by earthwork operations.

1. Perform excavation within drip-line of large trees to remain by hand, and protect the root system from damage or dryout to the greatest extent possible. Maintain moist condition for root system and cover exposed roots with burlap. Paint root cuts of 1" diameter and larger with emulsified asphalt tree paint.

PART 2 - PRODUCTS

SOILS MATERIALS:

Definitions:

See Subsurface Investigation for satisfactory and unsatisfactory materials, removal of surface veneer of vegetation, drainage fill, backfill and fill material.

PART 3 - EXECUTION

EXCAVATION:

Excavation is Unclassified, and includes excavation to subgrade elevations indicated, regardless of character of materials and obstructions encountered. If any rock is encountered – see Unit Pricing.

Earth Excavation includes excavation of pavements and other obstructions visible on ground surface; underground structures, utilities and other items indicated to be demolished and removed; together with earth and other materials encountered that are not classified as rock or unauthorized excavation.

Unauthorized excavation consists of removal of materials beyond indicated subgrade elevations or dimensions without specific direction of Architect/Engineer. Unauthorized excavation, as well as remedial work directed by Architect/Engineer, shall be at Contractor's expense.

Under footings, foundation bases, or retaining walls, fill unauthorized excavation by extending indicated bottom elevation of footing or base to excavation bottom, without altering required top elevation. Lean concrete fill may be used to bring elevations to proper position, when acceptable to Architect/Engineer.

Elsewhere, backfill and compact unauthorized excavations as specified for authorized excavations of same classification, unless otherwise directed by Architect/Engineer.

Additional Excavation: When excavation has reached required sub-grade elevations, notify Architect/Engineer who will make an inspection of conditions.

If unsuitable bearing materials are encountered at required subgrade elevations, carry excavations deeper and replace excavated material as directed by Architect/Engineer.

Removal of unsuitable material and its replacement as directed will be paid on basis of contract conditions relative to changes in work.

Stability of Excavations: Slope sides of excavations to comply with local codes and ordinances having jurisdiction. Shore and brace where sloping is not possible because of space restrictions or stability of material excavated.

Maintain sides and slopes of excavations in safe condition until completion of backfilling.

Dewatering: See civil drawings for drainage plan recommendation for controlling ground water during initial construction phase. Prevent surface water from flowing into excavations and from flooding project site and surrounding area.

Do not allow water to accumulate in excavations. Remove water to prevent softening of foundation bottoms, undercutting footings, and soil changes detrimental to stability of subgrades and foundations. Provide and maintain pumps, well points, sumps, suction and discharge lines, and other dewatering system components necessary to convey water away from excavations.

Establish and maintain temporary drainage ditches and other diversions outside excavation limits to convey rainwater and water removed from excavations to collecting or run-off areas. Do not use trench excavations as temporary drainage ditches.

Material Storage: Stockpile satisfactory excavated materials where directed, until required for backfill or fill. Place, grade and shape stockpiles for proper drainage.

Locate and retain soil materials away from edge of excavations. Do not store within drip line of trees indicated to remain.

Dispose of excess soil material and waste materials as herein specified.

Excavation for Structures: Conform to elevations and dimensions shown within a tolerance of plus or minus 0.10', and extending a sufficient distance from footings and foundations to permit placing and removal of concrete formwork, installation of services, other construction, and for inspection.

In excavating for footings and foundations, take care not to disturb bottom of excavation. Excavate by hand to final grade just before concrete reinforcement is placed. Trim bottoms to required lines and grades to leave solid base to receive other work.

Excavation for Pavements: Cut surface under pavements to comply with cross-sections, elevations and grades as shown.

Excavation for Trenches: Dig trenches to the uniform width required for particular item to be installed, sufficiently wide to provide ample working room. Provide 6" to 9" clearance on both sides of pipe or conduit.

Excavate trenches to depth indicated or required. Carry depth of trenches for piping to establish indicated flow lines and invert elevations.

Where rock is encountered, carry excavation 6" below required elevation and backfill with a 6" layer of crushed stone or gravel prior to installation of pipe.

Except as otherwise indicated, excavate for exterior waterbearing piping (water, steam, condensate, drainage) so top of piping is not less than 2'-6" below finished grade.

Grade bottoms of trenches as indicated, notching under pipe bells to provide solid bearing for entire body of pipe.

Backfill trenches with concrete where trench excavations pass within 18" of column or wall footings and which are carried below bottom of such footings, or which pass under wall footings. Place concrete to level of bottom of adjacent footing.

1. Concrete is specified in Division 3.

Do not backfill trenches until tests and inspections have been made and backfilling authorized by Architect/Engineer. Use care in backfilling to avoid damage or displacement of pipe systems.

Excavation for utilities shall conform to manufacturer's recommendations for the type material used.

Cold Weather Protection: Protect excavation bottoms against freezing when atmospheric temperature is less than 35 degrees F.

COMPACTION:

General: Control soil compaction during construction providing minimum percentage of density specified for each area classification indicated below.

Percentage of Maximum Density Requirements: Compact soil to not less than the following percentages of maximum density for soils which exhibit a well-defined moisture density relationship (cohesive soils) determined in accordance with ASTM D 698; and not less than the following percentages of relative density determined in accordance with ASTM D 2049, for soils which will not exhibit a well-defined moisture-density relationship (cohesionless soils).

1. Structures, Building Slabs and Steps and Pavements: Compact top 6" of subgrade and each layer of backfill (not exceeding 8" maximum) or fill material to not less than 98% of maximum density.
2. Lawn or Unpaved Areas: Compact top 6" of subgrade and each layer or backfill or fill material to not less than 90% of maximum density for cohesive soils and 90% of relative density for cohesionless soils.
3. Walkways: Compact top 6" of subgrade and each layer of backfill or fill material to not less than 95% of maximum density.

Moisture Control: Where subgrade or layer of soil material must be moisture conditioned before compaction, uniformly apply water to surface of subgrade, or layer of soil material, to prevent free water appearing on surface during or subsequent to compaction operations.

Remove and replace, or scarify and air dry, soil material that is too wet to permit compaction to specified density.

1. Soil material that has been removed because it is too wet to permit compaction may be stockpiled or spread and allowed to dry. Assist drying by discing, harrowing or pulverizing until moisture content is reduced to a satisfactory value.

BACKFILL AND FILL:

General: Place acceptable soil material in layers to required subgrade elevations, for each area classification listed below.

1. Utility Trenches backfill according to manufacturer's recommendation for the type material used.
2. In excavations, use satisfactory excavated or borrow material.
3. Under grassed areas, use satisfactory excavated or borrow material.
4. Under structures, building slabs, steps and pavements and after grading operations, thoroughly mix top 6" of subgrade and compact to a density not less than 98% of maximum density.
5. Under walks and pavements, use satisfactory excavated or borrow material, or combination of both.
6. Under building slabs, use drainage fill material.

Backfill excavations as promptly as work permits, but not until completion of the following:

1. Acceptance of construction below finish grade including, where applicable, dampproofing, waterproofing, and perimeter insulation.
2. Inspection, testing, approval, and recording locations of underground utilities.
3. Removal of concrete formwork.
4. Removal of trash and debris.

Ground Surface Preparation: Remove vegetation, debris, unsatisfactory soil materials, obstructions, and deleterious materials from ground surface prior to placement of fills. Plow, strip, or break-up sloped surfaces steeper than 1 vertical to 4 horizontal so that fill material will bond with existing surface.

When existing ground surface has a density less than that specified under "Compaction" for particular area classification, break up ground surface, pulverize, moisture-condition to optimum moisture content, and compact to required depth and percentage of maximum density.

Placement and Compaction: Place backfill and fill materials in layers not more than 8" in loose depth for material compacted by heavy compaction equipment, and not more than 4" in loose depth for material compacted by hand-operated tampers.

Before compaction, moisten or aerate each layer as necessary to provide optimum moisture content. Compact each layer to required percentage of maximum dry density or relative dry density for each area classification. Do not place backfill or fill material on surfaces that are muddy, frozen, or contain frost or ice.

Place backfill and fill materials evenly adjacent to structures, piping or conduit to required elevations. Take care to prevent wedging action of backfill against structures or displacement of piping or conduit by carrying material uniformly around structure, piping or conduit to approximately same elevation in each lift.

GRADING:

General: Uniformly grade areas within limits of grading under this section, including adjacent transition areas. Smooth finished surface within specified tolerances, compact with uniform levels or slopes between points where elevations are indicated, or between such points and existing grades.

Grading Outside Building Lines: Grade areas adjacent to building lines to drain away from structures and to prevent ponding.

Finish surfaces free from irregular surface changes, and as follows:

1. Lawn or Unpaved Areas: Finish areas to receive topsoil to within not more than 0.2’ above or below required subgrade elevations.
2. Walks: Shape surface of areas under walks to line, grade and cross-section, with finish surface not more than 0.10' above or below required subgrade elevation.
3. Pavements: Shape surface of areas under pavement to line, grade and cross-section, with finish surface not more than 0.10’ above or below required subgrade elevation.

Grading Surface or Fill under Building Slabs: Grade smooth and even, free of voids, compacted as specified, and to required elevation. Provide final grades within a tolerance of 1/2" when tested with a 10' straightedge.

Compaction: After grading, compact subgrade surfaces to the depth and indicated percentage of maximum or relative density for each area classification.

BUILDING SLAB DRAINAGE COURSE:

General: Drainage course consists of placement of drainage fill material, in layers of indicated thickness, over subgrade surface to support concrete building slabs.

Placing: Place drainage fill material on prepared subgrade in layers of uniform thickness, conforming to indicated cross-section and thickness. Maintain optimum moisture content for compacting material during placement operations.

When a compacted drainage course is shown to be 6" thick or less, place material in a single layer. When shown to be more than 6" thick, place material in equal layers, except no single layer more than 6" or less than 3" in thickness when compacted.

FIELD QUALITY CONTROL:

Quality Control Testing During Construction: Allow approved testing laboratory to inspect and approve subgrades and fill layers before further construction work is performed.

1. Perform field density tests in accordance with ASTM D 1556 (sand cone method) or ASTM D 2167 (rubber balloon method), or ASTM D 2922 (nuclear method) as applicable.
2. Footing Subgrade: For each strata of soil on which footings will be placed, conduct at least one test to verify required design bearing capacities. Subsequent verification and approval of each footing subgrade may be based on a visual comparison of each subgrade with related tested strata, when acceptable to Architect/Engineer.
3. Paved Areas and Building Slab Subgrade: Make at least one field density test of subgrade for every 3000 sq. ft. of paved area or building slab, but in no case less than 2 tests. In each compacted fill layer, make one field density test for every 3000 sq. ft. of overlaying building slab or paved area, but in no case less than 2 tests.
4. Foundation Wall Backfill: Take at least 2 field density tests, at locations and elevations as directed.

If in opinion of Architect/Engineer, based on testing service reports and inspection, subgrade or fills which have been placed are below specified density, provide additional compaction and testing at no additional expense.

MAINTENANCE:

Protection of Graded Areas: Protect newly graded areas from traffic and erosion. Keep free of trash and debris.

Repair and re-establish grades in settled, eroded, and rutted areas to specified tolerances.

Reconditioning Compacted Areas: Where completed compacted areas are disturbed by subsequent construction operations or adverse weather, scarify surface, re-shape, and compact to required density prior to further construction.

Settling: Where settling is measurable or observable at excavated areas during general project warranty period, remove surface (pavement, lawn or other finish), add backfill material, compact, and replace surface treatment. Restore appearance, quality, and condition of surface or finish to match adjacent work, and eliminate evidence of restoration to greatest extent possible.

DISPOSAL OF EXCESS AND WASTE MATERIALS:

Removal from Owner's Property: Remove waste materials, including unacceptable excavated materials, trash and debris, and legally dispose of it off Owner's property site, in area approved by all local authorities and the Georgia Department Of Natural Resources, Environmental Protection Division.

END OF SECTION 02200

SECTION 02282 - TERMITE CONTROL

PART 1 – GENERAL

RELATED DOCUMENTS

Drawings and general provisions of the contract including General and Supplementary Conditions and Division 1 Specification Sections apply to work of this section.

SUMMARY

Provide soil treatment for termite control, as herein specified.

SUBMITTALS

Product Data: Submit manufacturer's technical data and application instructions.

QUALITY ASSURANCE

In addition to requirements of these specifications, comply with manufacturer's instructions and recommendations for work, including preparation of substrate and application.

Engage a professional pest control operator, licensed in accordance with regulations of governing authorities for application of soil treatment solution.

Use only termiticides which bear a Federal registration number of the US Environmental Protection Agency.

JOB CONDITIONS

Restrictions: Do not apply soil treatment solution until excavating, filling and grading operations are completed, except as otherwise required in construction operations.

To insure penetration, do not apply soil treatment to frozen or excessively wet soils or during inclement weather. Comply with handling and application instructions of the soil toxicant manufacturer.

SPECIFIC PRODUCT WARRANTY

Furnish written warranty certifying that applied soil termiticide treatment will prevent infestation of subterranean termites and that if subterranean termite activity is discovered during warranty period. Contractor will re-treat soil and repair or replace damage caused by termite infestation.

1. Provide warranty for a period of 5 years from date of treatment, signed by Applicator and Contractor.

PART 2 – PRODUCTS

SOIL TREATMENT SOLUTION

Use an emulsible concentrate termiticide for dilution with water, specially formulated to prevent infestation by termites. Fuel oil will not be permitted as a diluent. Provide a solution consisting of one of the following chemical elements and concentrations:

1. Water based emulsion, uniform composition, synthetic dye to permit visual identification of treated soil, of a generic chemical type in compliance with state and federal law and regulations.

Solutions as recommended by Applicator and approved for intended application by jurisdictional authorities. Use only soil treatment solutions which are not injurious to planting or persons.

PART 3 – EXECUTION

APPLICATION

Surface Preparation: Remove foreign matter which could decrease effectiveness of treatment on areas to be treated. Loosen, rake and level soil to be treated, except previously compacted areas under slabs and foundations. Toxicants may be applied before placement of compacted fill under slabs, if recommended by toxicant manufacturer.

Application Rates: Water to be added to solution at job site in the presence of field Superintendent. Apply soil treatment solution at a rate as recommended by the manufacture at the following locations:

Under slab-on-grade structures, treat soil before concrete slabs are placed, including entire inside perimeter inside of foundation walls, along both sides of interior partition walls, around plumbing pipes and electric conduit penetrating slab and around interior column footers.

Apply chemical solution to soil in critical areas under slab, including entire inside perimeter inside of foundation walls, along both sides of interior partition walls, around plumbing pipes and electric conduit penetrating slab and around interior column footers.

1. Apply chemical solution as an overall treatment under slab and attached slab areas where fill is soil or unwashed gravel. Apply chemical solution to areas where fill is washed gravel or other coarse absorbent material.
2. Apply chemical solution for each foot of depth form grade to footing, along outside edge of building. Dig a trench 6" to 8" wide along outside of foundation to a depth of not less than 12". Punch holes to top of footing at not more than 12" o.c. and apply chemical solution. Mix chemical solution with the soil as it is being replaced in trench.

At hollow masonry foundations or grade beams, treat voids.

At expansion joints, control joints, and areas where slabs will be penetrated, apply chemical solution.

Post signs in areas of application to warn workers that soil termiticide treatment has been applied. Remove signs when areas are covered by other construction.

Reapply soil treatment solution to areas disturbed by subsequent excavation, landscape grading, or other construction activities following application.

END OF SECTION 02282

SECTION 02514 - PORTLAND CEMENT CONCRETE PAVING

PART 1 - GENERAL

RELATED DOCUMENTS:

Drawings and general provisions of the contract including General and Supplementary Conditions and Division 1 Specification Sections apply to work of this section.

DESCRIPTION OF WORK:

Extent of Portland cement concrete paving work is indicated on drawings.

Paving work includes, but is not limited to the following:

1. Walks, Pads, Ramps, Steps, Curb and Gutter.

Prepared subgrade is specified in Section 02200, Earthwork.

Concrete and related materials are specified in Division 3 Specifications.

QUALITY ASSURANCE:

Referenced Standards: Where the term "Referenced Standard" is used in these Project Specifications, it shall be interpreted as referring to the current edition of **"Construction Standards and Details latest edition of State of Georgia Department of Transportation"**. Referenced Divisions of the "Standard" are hereby made a part of this Project Specification insofar as they may be termed applicable. In no case will requirements for "Method of Measurement" and "Basis of Payment" be considered as applicable to this Project Specification.

Testing and Inspection:

1. Testing and Inspection Services: The **Owner** will engage and pay for testing and inspection services, to include testing soil materials proposed for use during paving operations.
2. Field tests will be performed in conjunction with a proofrolling inspection of the prepared subgrade to verify that existing subgrade conditions are similar to those assumed in the design and therefore adequate for support of the pavement system.

Do not change source or brands of material during the course of the work.

INSPECTION AND APPROVAL OF WORK:

Before commencement of work, Contractor shall coordinate with the Architect to arrange for inspection and approval of initial installation of slabs-on-grade. The approved initial installations shall serve as the standard to which all subsequent work shall adhere.

PORTLAND CEMENT CONCRETE MATERIALS:

Portland Cement concrete paving shall be in accordance with "Construction Standards and Details latest edition of State of Georgia Department of Transportation". Use gray cement.

Concrete Formwork shall be in compliance with the "Referenced Standard".

Expansion Joint Materials shall be preformed joint filler in compliance with "Construction Standards and Details latest edition of State of Georgia Department of Transportation" and the detailed drawings.

PART 3 – EXECUTION

CONCRETE FORMWORK:

Execute construction of concrete formwork in accordance with the "Referenced Standard".

CLEANING UP:

Remove all surplus materials, rubbage, cartons and other debris resultant from work of this Section and haul off site. Repair damage resulting from paving operations. Leave entire work in broom-clean condition.

END OF SECTION 02514

SECTION 02515 - BRICK PAVERS

PART 1 - GENERAL

RELATED DOCUMENTS:

Drawings and general provisions of the contract including General and Supplementary Conditions and Division 1 Specification Sections apply to work of this section.

DESCRIPTION OF WORK

The extent of paving is indicated on drawings and in schedules. Types of paving include the following:

Grouted pavers set in mortar.

QUALITY ASSURANCE

Installer: Subcontract paving work to a firm with not less than 5 years of successful experience in the required types of paving application.

Sample Installation: Prior to installation of masonry paving work, fabricate sample panel using materials, pattern and joint treatment indicated for project work, including special features for expansion joints and contiguous work. Build panel at the site, as directed, of full thickness and approximately 4’ x 3’, unless otherwise indicated. Provide range of color, texture and workmanship to be expected in the completed work. Obtain Architect’s acceptance of visual qualities of the panel before start of masonry paving work. Retain panel during construction as a standard for judging completed masonry paving work. Do not move or destroy sample panel until work is completed.

Do not change source of brands for masonry units or setting materials during progress of work.

SUBMITTALS

Product Data: Submit manufacture’s technical data for each manufactured product, including certification that each product complies with specified requirements.

Samples: For initial selection of color and texture submit the following:

1. Paving unit samples showing full range of colors and textures available in products complying with specified requirements. Furnish samples made up of actual units or sections of units. Following preliminary selection of colors and textures, submit

samples consisting of 5 individual units for each color and texture under consideration. Include in each set the maximum variation to be expected in finished work.

PRODUCT HANDLING

Protect materials during storage and construction against setting by rain, snow or ground water and against soilage or intermixture with earth or other types of materials.

JOB CONDITIONS

Frozen Materials: Do not use frozen materials or materials mixed or coated with ice or frost.

Frozen Work: Do not build on frozen subgrade or setting beds. Remove and replace masonry work damaged by frost or freezing.

Weather Limitations: Protect masonry against freezing when atmospheric temperature is 40°F (4°C) and falling. Heat materials and provide temporary protection of completed portions of masonry work. Comply with requirements of BIA Technical Notes, No. 1A, “Cold Weather Masonry Construction - Construction and Protection Recommendations”.

Hot Weather Requirements: Protect masonry in hot weather to prevent excessive evaporation of setting beds and grout. Provide artificial shade, wind breaks and use cooled materials, as required.

PART 2 - PRODUCTS

Manufacturers: The following manufacturers' products have been used to establish minimum standards for materials, workmanship and function:

Belden Brick Company – Series Belcrest 760

Equal products of other manufacturers may be used in the work provided such products have been approved by the Architect, not less than five (5) days prior to scheduled bid opening.

Materials:

Solid (uncored) brick, size 4” x 8” x 2¼”, square edged, complying with ASTM C902, Type II.

Color and texture – as selected by Architect.

SETTING MATERIALS:

Brick Pavers to be set with mortar.

PART 3 - EXECUTION

INSTALLATION, GENERAL

Do not use units with excessive chips, cracks, voids, discolorations or other defects which might be visible or cause staining in finished work.

Cut units with motor-driven saw equipment to provide clean, sharp, unchipped edges. Cut units to provide pattern shown and to fit adjoining work neatly. Use full units without cutting wherever possible.

Set units in patterns shown and with uniform joints of width indicated.

Tolerances: Do not exceed 1/8” unit-to-unit offset from flush, nor a tolerance if 1/8” in 1’-0” and 1/4” in 10’-0” from level or slope as indicated, for finished surface of masonry paving.

Install joint filler where sealant type joints are shown. For joint filler and sealant materials and for their installation requirements, refer to Division 7 section on Joint Sealers.

PORTLAND CEMENT APPLICATIONS

Clean concrete subbase to remove dirt, dust, debris and loose particles.

Saturate concrete subbase with clean water several hours before placing setting bed. Remove surface water about 1 hour before placing setting bed.

Apply slush coat of cement grout over surface of concrete subbase about 15 minutes prior to placing setting bed. Limit area of slush coat to avoid its drying out prior to placing setting bed. Mix slush coat to a consistency similar to that of thick cream and consisting of either neat cement and water or cement, sand and water. Do not exceed 1/16” thickness for cement slush coat.

Mix setting bed in proportions of one bag of Portland Cement to 3 parts sand (measured in damp loose condition) to quantity of liquid admixture recommended

by admixture manufacturer and necessary to produce stiff mixture with a moist surface when setting bed is ready to receive brick.

Spread and screed setting bed to uniform thickness at subgrade elevations required for accurate setting of brick to finish grades indicated. Mix and place only the amount which can be covered with pavers prior to initial set. Cut back, bevel edge, remove and discard setting bed material which has reached initial set prior to placing pavers.

Fill joints with limestone screenings or sharp sand.

REPAIR, POINTING, CLEANING AND PROTECTION

Remove and replace paving units which are loose, chipped, broken, stained or otherwise damaged, or if units do not match adjoining units as intended. Provide new units to match adjoining units and install in same manner as original units, with same joint treatment to eliminate evidence of replacement.

Protect paving installations from deterioration, discoloration or damage during subsequent construction and until acceptance of work, in compliance with recommendations of installer and paving unit manufacturer.

END OF SECTION 02515

SECTION 02660 - WATER DISTRIBUTION SYSTEM

PART 1 - GENERAL

RELATED DOCUMENTS:

Drawings and general provisions of the contract including General and Supplementary Conditions and Division 1 Specification Sections apply to work of this section.

SCOPE OF WORK:

The work includes construction of the water distribution system including fire lines as shown on the Drawings.

Testing and disinfection of the installed system shall be incidental to the work.

QUALITY ASSURANCE:

Requirements of Regulatory Agencies: Comply with applicable codes, ordinances, rules, regulations, and laws of local, municipal, state of federal authorities having jurisdiction.

Meet all requirements of the Local Water Authority and be subject to review by System inspectors.

SITE CONDITIONS:

Coordinate water distribution system with pavement construction.

Install water mains when grade is within 6 in. of final grade.

Coordinate the Work with the Local Water Authority and pay all tap fees assessed (to include valves, backflow preventers, vaults, etc.) for portions of the Work completed by the Utility Provider.

PART 2 – PRODUCTS

MATERIALS:

Water Main Piping:

1. Water Service Piping: Ductile iron pipe or PVC pipe.

2. Ductile Iron Pipe:
   a. Manufactured in accordance with AWWA C-151, latest revision, Class 50, min.
   b. Standard cement-lined and seal-coated with an approved bituminous seal coat in accordance with AWWA C-104, latest revision.
   c. Approved push-on, conforming to AWWA C-111, latest revision.

PVC Pipe:

1. Constructed to meet the requirements of U. S. Department of Commerce Product Standard PS 22-70, and bear the National Sanitation Foundation Testing Laboratories, Inc., seal for potable water.
2. For PVC piping less than 4" - Schedule 40, PVC, minimum; 150 psi minimum working pressure
3. 4" or greater shall be C900 PVC piping.

Fire Line:

1. Fire line shall be C900 PVC piping. Encasement shall be used under drive areas.
2. Connection to Main: Each hydrant shall be connected to the main pipe with a 6-inch ductile iron branch. Each hydrant shall be controlled by an independent 6-inch gate valve.

Fire Hydrants:

All hydrants shall be Mueller Company, M & H, or an approved equal. Fire hydrants shall be equipped with traffic break away feature. Hydrants shall be painted in accordance with the requirements of AWWA C502.

Water Main Fittings:

PVC Fittings: Fittings For PVC Water Mains Smaller Than 6 In. In. Dia.: As recommended by the manufacturer of the pipe furnished, suitable for use under the conditions specified for the pipe, with ring-tite or fluid-tite bells or spigots at all ends for jointing.

Valves and Boxes:

Valves 2" and Larger: Cast iron gate valves, AWWA type, the standard product of a recognized valve manufacturer such as Mueller, Iowa or M & H, constructed with an interchangeable parts system, with parts readily available, to meet the following requirements:

1. Iron body, bronze-mounted.
2. Double disc, parallel seat "O" ring seal.
3. 150 psi, min., working pressure.
4. Counterclockwise (left) opening.
5. 2 in. operating nut.
6. Non-rising stem.
7. Joints to be as required for pipe to be connected to.

Valves 2" and Smaller: Brass or bronze gate valves, conforming to Federal Specification WW-V-76.

Underground Valves: Two-piece, screw type, adjustable to suit the depth of bury and type of valve, with a min. shaft dia. of 5-1/4 in.

PART 3 – EXECUTION

INSTALLATION:

General: Line and Grade: Lay and maintain to the required lines and grades; with fittings, valves and hydrants at the required locations; and with joints centered and spigots plumb; and with all valve and hydrant stems plumb.

Encasement: Piping under paved drive shall be encased with welded steel pipe casing.

Laying Pipe:

General: Before lowering pipe into trenches, grade the bottom of the ditch so that when pipe is in the ditch it will have a bearing for its entire length. Examine the pipe for defects and clean the inside. After placing pipe in ditch, wipe the bell, gasket, and spigot free from all dirt, sand and foreign material. Apply a film of lubricant to the gasket and spigot. Enter the plain end into the socket after which force the pipe into the socket until it makes contact with the bottom of the socket.

Trench Water: At times when pipe laying is not in progress, close the open ends of pipe by approved means, and permit no trench water to enter the pipe.

Cutting Pipe: Cut pipe for inserting valves, fittings or closure pieces in a neat and workmanlike manner without damage to the pipe.

Direction of Laying: Unless otherwise directed, lay pipe with bell ends facing in the direction of laying. For lines on an appreciable slope, face bells upgrade.

Permissible Deflections: Wherever necessary to deflect pipe from a straight line, either in the vertical or horizontal plane, to avoid obstructing, to plumb stems, or where long radius curves are permitted, deflect as recommended by the manufacturer of the pipe.

Unsuitable Conditions: Lay no pipe in water or when the trench conditions or weather is unsuitable for such work.

Provide ground cover of 3 ft. min.

Setting Appurtenances:

Valves and Fittings: Set gate valves and pipe fittings to new pipe in the manner previously specified for cleaning, laying and jointing pipe.

Valve Boxes: Firmly support cast iron valve boxes, and maintain centered and plumb over the wrench nut of the gate valve, with box cover flush with the surface of the finished pavement or at such other level as may be directed.

FIELD QUALITY CONTROL:

Hydrostatic Tests: Pressure During Test: After the pipe has been laid and partially backfilled as specified, pressure test all newly laid pipe, or any valved section of it, in accordance with Local required procedures.

CLEANING AND DISINFECTION:

Clean out and thoroughly flush the water distribution system piping and leave free from foreign materials of any sort prior to sterilization.

Disinfect in accordance with Local required procedures and AWWA Standard C-651, latest edition.

END OF SECTION 02660

SECTION 02720 - STORM SEWERS

PART 1 – GENERAL

RELATED DOCUMENTS:

Drawings and general provisions of the contract including General and Supplementary Conditions and Division 1 Specification Sections apply to work of this section.

QUALITY ASSURANCE:

Requirements of Regulatory Agencies: Comply with applicable codes, ordinances, rules, regulations, and laws of local, municipal, state or federal authorities having jurisdiction.

All locations including total jobsite: All storm drainage shall be in accordance with Local and State Requirements.

SUBMITTALS:

Submit manufacturer's data, test reports, material certifications as required.

SITE CONDITIONS:

Protection of Existing Utilities: Protect existing power lines, water mains, gas lines, telephone lines and other utilities. Should any functioning underground utilities be uncovered during the Work, advise for determination as to whether or not they are to be removed. Repair any damage to utility lines and restore service to original condition.

Coordination and Scheduling of Work:

1. Coordinate work with earthwork operations to avoid interference. Protect established construction stakes.
2. Establish and maintain center-lines, grades and elevations.
3. Construction of new sewers and drainage systems shall proceed as early in construction program as possible. Maintain adequate drainage of the project area at all times. Prevent flooding of adjacent roads and private properties.

Temporary Drainage: Wherever possible, construct new sewers and inlets to serve the various drainage areas, and place in service. Where this is not possible, provide temporary drainage facilities as required. These may include temporary connections into completed sewers, or such other means as the circumstances may require.

PART 2 – PRODUCTS

MATERIALS:

Storm Drain Pipe Materials:

The Contractor shall have the following options for pipe material:

1. Class III reinforced concrete, meeting the requirements of ASTM C76 with tongue and groove joints unless indicated otherwise in the drawings.
2. Contech A-2000
3. ADS N-12 HP

Use ductile iron where indicated on the drawings.

Downspout Boots (If Indicated on the Drawings): Provide downspout boot equal to Neenah Foundry Company R-4929-A10 offset, inside top bell 5" x 7", 40" long, connect to metal downspouts and run drain line to storm sewer line.

Appurtenance Material:

Brick:

1. Clay or Shale Brick: Comply with ASTM C 32 for Sewer Brick and Manhole Brick, grade as selected.
2. Concrete Masonry Units: Comply with ASTM C 139.

Mortar: Comply with ASTM C 270, Type M, for pipe joints and man- hole and inlet brickwork.

Concrete:

1. Concrete for use in precast concrete catch basins, curb inlets, drop inlets and manholes shall be 3000 psi at age 28 days.

Reinforcement: Comply with ASTM A 615.

Castings: Comply with ASTM A 48, grey cast-iron.

Riprap: Riprap shall be Class I conforming to Section 814 of the State of Alabama Highway Department Standard Specifications.

PART 3 – EXECUTION

INSTALLATION:

Storm Drainage System: Construct drainage structures and appurtenances in accordance with applicable standard drawings and construction details shown on the Drawings.

Lay all pipe in an open trench of dimensions as given below:

1. Lengths of storm drain pipe shown on the Drawings are approximate distances center-to-center of structures. Install pipe based on actual field measurements.

Excavation:

Excavation is open cut. The top portion of trenches may be excavated as required by the Contractor to any width which will not cause damage to adjacent structures. The lower portion of the trench, to a height of 1 ft. above the top of the pipe shall not exceed 18 in. greater than the pipe dia.

All excavation shall be prosecuted in accordance with requirements of OSHA "Safety and Health Regulations for Construction".

When sheeting or shoring is used, widths may be increased by the thickness of the timbers. All protective measures required are the responsibility of the Contractor and shall be provided at the Contractor's expense.

Carefully shape the bottom of trenches to conform to and support the lower 1/4 of the periphery of the pipe barrel. At the Contractor's option, trenches may be excavated slightly over depth, and then the pipe bed may be constructed of approved granular material, thoroughly tamped and carefully shaped to conform to and support the lower 1/4 of the periphery of the pipe barrel. Where rock is encountered, remove to a depth of 6 in. below the pipe and replace with an approved granular material.

Where suitable material, such as muck, is encountered at or below invert elevation during excavation, remove and replace with suitable material, or stabilize by the addition of a granular material.

Pipe Laying:

Proceed upgrade where practicable. Lay pipe shall true to grade and line with a straight and uniform invert. Do not lay pipe in a wet or muddy trench. Dewater trenches as required with firm, smooth and properly shaped bed as specified.

Lay corrugated metal pipe so that if invert paving has been damaged, repair with an asphaltic compound to the satisfaction of the Engineer.

Joints for reinforced concrete pipe shall be with sand-cement grout.

Backfilling: Backfill with selected material, free from rock larger than 2 in. in size, or debris. Carefully place backfill and tamp around and over the pipe to avoid displacement of the pipe or damage to the joints. Place all backfill in 6 in. lifts and compact as required in Section 02200, Earthwork. Compaction methods shall be at the Contractor's option as long as the desired results are obtained; otherwise, the Architect may order changes in methods or equipment.

Appurtenances and Drainage Structures:

Furnish and install drainage structures as shown in detail on the Drawings. Install shaped inverts.

Fill all mortar joints full. Tool all joints.

Cut and grind all pipe, where cut at face of structure wall, smooth with the face of the wall.

Pack full all joints around pipe and structure wall at the face of the wall with mortar.

Clean bottom of drainage structures of all debris, and wipe walls clean of mortar as work progresses.

Construct catch basin tops true to line and grade, and slope continuous with gutter.

Install cast iron steps in all structures over 4 ft. deep, installed 15 in. o.c. in a vertical direction. Cast iron steps and manhole rings and covers shall meet ASTM A 48.

Construct junction boxes with bottom as shown in details for drop inlets, catch basins or other structures. Construct tops to accommodate a standard manhole ring, and adjust over to grade.

Where indicated in the Storm Structure Schedule, drainage basins by Contech or Nylopast may be used.

ADJUSTING AND CLEANING:

At completion, remove all excess materials, debris, etc. resultant from operations of this Section of Work.

Leave drainage systems clean and free from mud or debris of any kind. When looked through, each line between structures shall show a full circle of light; otherwise the Contractor shall be required to remove and replace the defective portion of the work, at the Contractor's expense.

END OF SECTION 02720

SECTION 02730 - SANITARY SEWERS

PART 1 - GENERAL

RELATED DOCUMENTS:

Drawings and general provisions of the contract including General and Supplementary Conditions and Division 1 Specification Sections apply to work of this section.

QUALITY ASSURANCE:

Requirements of Regulatory Agencies: Comply with applicable codes, ordinances, rules, regulations and laws of local, municipal, state or federal authorities having jurisdiction.

Sanitary sewer construction is subject to review and acceptance by the Local Sewer Department and shall meet their requirements.

SITE CONDITIONS:

Coordinate sanitary sewer construction with grading operations to avoid deep trench conditions insofar as possible.

PART 2 – PRODUCTS

MATERIALS:

Pipe: Type as shown Drawings.

PVC Pipe:

1. Gravity Pipe – Plastic pipe for gravity sewers, stacks and laterals, and fittings shall be unplasticized polyvinyl chloride (PVC), meeting or exceeding ASTM Specification D3034, latest edition, Classification SDR 35.
2. Force Main Pipe – PVC pipe for force mains shall conform to the requirements of ASTM D2241 for pressure pipe or AWWA C900. Pipe shall be Class 150 with a Standard Dimension Ration of 18 or heavier.
3. All sanitary sewer PVC pipe shall be either green or brown in color.

Appurtenances:

1. Manholes: Precast concrete units conforming to ASTM 478.
2. Castings: Grey cast iron conforming to ASTM A 48.

PART 3 – EXECUTION

INSTALLATION:

Trenching and Excavation:

Excavate in open trench to the width, depth and in the direction necessary for the proper construction of the pipe sewer according to the drawings.

Shape the bottom of the trench so as to conform as nearly as possible to the outside of the pipe, particular care being taken to recess the bottom of the trench in such a manner as to relieve the bell of the pipe of all load.

Build pipe sewers in a trench, the width of which at the top of the pipe shall not exceed the external dia. of the bell of the pipe, plus 12 in. each side, unless otherwise directed by the Engineer, but in no case less than 24 in. in width.

All excavation shall be performed in accordance with requirements of OSHA "Safety and Health Regulations for Construction".

Backfilling: Backfill all trenches and excavation immediately after the pipes are laid therein unless other protection for the pipe line is directed. The backfilling material shall be selected and deposited with special reference to the future safety of the pipes. Solidly tamp clean earth, sand or rock dust abut the pipe up to the level of 6 in. above the top of the pipe, and carefully deposit in uniform layers, each layer solidly tamped or rammed with proper tools so as not to disturb or injure the pipe line. Mechanical means may be permitted for backfilling, provided the equipment meets the approval of the Architect. Faithfully ram or tamp the remainder of the backfilling of the trenches in layers of not more than 6 in. in depth with either approved mechanical or hand tamps. Compaction shall conform to the requirements of Section 02200, Earthwork.

All backfilling material shall be free from rock, trash and debris.

Laying Pipe

Lay pipe with joints close and even, butting all around, special care being taken that there is no sagging at the hub, and that a true surface is given to the invert throughout the entire length of the sewer.

Water in Trenches: Do not use sewers for draining water from ditch. Provide and operate pumps, if necessary, to remove water from trench while pipe is being laid and joints made.

Jointing Pipe:

In jointing gasket pipe, clean both the bell and the spigot before the gasket is applied. Use the proper size gasket for each size of pipe, and lubricate only with a lubricant recommended by the manufacturer of the pipe. Insert the spigot end in the bell the proper distance, and take care to see that the pipe remains in this position.

Clean all joint material that may be left on the inside, and leave the pipe clean and smooth throughout. At every third pipe, fill around immediately after being properly placed and jointed to prevent the moving of joints.

Free the interior of the pipe of all dirt and superfluous material of every description, as the work proceeds.

Manholes:

Manholes shall be precast concrete conforming to ASTM 478. Shape inverts, and build of concrete.

FIELD QUALITY CONTROL:

Testing: Perform all testing as required by the Local Authority.

ADJUSTING AND CLEANING:

Clean and clear sanitary sewers of materials of all kind.

END OF SECTION 02730

SECTION 02810 – IRRIGATION

PART 1 – GENERAL

RELATED DOCUMENTS:

Drawings and general provisions of the contract including General and Supplementary Conditions and Division 1 Specification Sections apply to work of this section and Section 02900 - "Landscape Work"

DESCRIPTION OF WORK

Furnish all labor, materials, equipment and services necessary for the complete installation of the landscape irrigation system as drawn and specified. The work includes, but is not limited to:

1. Trench, backfill and compaction for irrigation lines.
2. Automatically controlled landscape irrigation system; backflow preventer; pressure reducing valve; isolation gate valves; piping and sleeves under paving; repair of paving, main and lateral lines; electrical valves and wiring; valve boxes and controllers; sprinklers; couplings; connectors; fittings; and if needed, tape and meter.
3. Test all systems and make operative.
4. Submit Record Drawings and Maintenance Manual.
5. One-year Guarantee Period.
6. Maintain and operate for 1-year beyond Date of completion of Substantial Completion punch list.

QUALITY CONTROL

Installer Qualifications: Firm shall hold a Georgia General Contractors License for Specialty Construction, Sub-classification - Landscaping or Other Specialty Construction (specified as Irrigation). Firm experienced in the successful installation of a minimum of five (5) projects within the past five (5) years similar in scope, quality, and contract value to that indicated for this project. Firm shall have sufficient manpower, equipment and financial resources to complete the Work of this Section.

The Owner and the Landscape Architect reserve the right to reject any and all materials and workmanship, which they deem to be not in accordance with Drawings and Specifications. Rejected materials and work shall be removed from site immediately and replaced with that of the specified quality.

Applicable Standards:

1. ASTM D1785 - Poly (Vinyl Chloride) (PVC) Plastic Pipe, Schedule 40.
2. ASTM D2464 - Poly (Vinyl Chloride) (PVC) Plastic Pipe Fittings, Threaded, Schedule 40.
3. ASTM D2466 - Poly (Vinyl Chloride) (PVC) Plastic Pipe Fittings, Socket Type, Schedule 40.
4. ASTM D2564 - Solvent Cements for Poly (Vinyl Chloride) (PVC) Plastic Pipe and Fittings.

Applicable Codes:

1. Most current edition of Uniform Plumbing Code.
2. Applicable Building Code.
3. All applicable local codes and ordinances.
4. National Electrical Code.
5. Should Specification's requirements differ from local requirements, consider Contract Document requirements to be the minimum acceptable and comply with any more stringent local requirements.

Permits and Fees:

1. Obtain all permits and pay required fees to any agency having jurisdiction over the work.
2. Arrange inspections required by local ordinances during the course of construction.
3. Upon completion of the work, furnish satisfactory evidence to show that all work has been installed in accordance with the ordinances and code requirements.

Testing:

1. Perform testing and inspections required by specifications and by regulating authorities.
2. Give 24 hour notice that such tests are to be conducted.

SUBMITTALS

Qualification data for firms specified in "Quality Control" article to demonstrate their capabilities and experience. Include a list of a minimum of 5-similar projects completed within the last 5-years with project name, address, names of Architects and Owners, overall description of scope of work and contract value.

Shop Drawings:

Submit with Shop Drawings manufacturer's catalog sheet showing full specifications of each type sprinkler proposed including discharge of GPM, minimum allowable operating pressure at sprinkler, maximum allowable spacing and distance of throw (coverage).

Record Drawings:

1. Prepare and submit a reproducible Record Drawing showing deviations from the Contract Documents made during construction affecting the main line pipe, controller location, valve locations, and all sprinkler head locations. Record Drawings shall also indicate and show approved substitutions of size, material, and manufacturer's name and catalog number and name.
2. Deliver Record Drawings with request for inspection and acceptance.
3. Deliver one (1) set of record drawings, reduced in size and laminated. Drawings should be suitable for mounting adjacent to irrigation controller.

Maintenance Manual:

1. Prepare and submit irrigation system maintenance and operating instructions, with relevant manufacturer's literature. Include complete parts list covering all operating equipment.
2. Include full name, address, and telephone number of Installer.

COORDINATION

Coordinate and cooperate with the Architect and other contractors and trades to enable the work to proceed as rapidly and efficiently as possible, and to be completed on schedule.

Anticipate last minute delays, which may necessitate overtime work to complete the work on schedule. Sleeves under paving shall be placed by Site Contractor. Coordinate with other trades on site for sequencing of work.

SITE INSPECTION

Become familiar with all site conditions.

Should utilities not shown on plans be found during excavations, promptly notify the Architect for instructions as to further action.

Make necessary adjustments in the layout as may be required:

1. To connect to existing stub-outs (should such stubs not be located exactly as shown); or

2. To work around existing work. Such adjustments shall be made with no increase in cost to the Owner.
3. To avoid existing utilities.

PROTECTION OF EXISTING CONDITIONS

Take necessary precautions to protect site conditions to remain.

Should damage be incurred, repair the work to its original condition at no additional cost to the Owner.

PART 2 – PRODUCTS

PVC PIPE - (Polyvinyl Chloride Pipe):

1. PVC pipe shall be manufactured in accordance with standards noted herein.
2. Marking and Identification: PVC pipe shall be continuously and permanently marked with the following information:
   a. Manufacturer's name, pipe, size, type of pipe and material, SDR number, ASTM standard number and NSF (National Sanitation Foundation) seal.
3. Irrigation Water Piping:
   a. Main Lines: ASTM D-1785, Schedule 40.
   b. Lateral Lines: ASTM D-1785, Class 200.
4. Sleeves under paving and curbs: To be installed by this contractor. If installed by the General Contractor, this Contractor is responsible for determining if sleeves were installed prior to submitting a bid.

PIPE FITTINGS

PVC: Meeting specified standards, Schedule 40, Standard Weight, at PVC pipe; joints solvent welded as recommended by manufacturer, except swing joints and riser to head, which shall be threaded with Teflon Tape. Swing joints shall be Schedule 80.

SOLVENT CEMENT

Meeting ASTM D-2564 and of proper consistency.

RISERS

1. Spray Heads in all areas use swing pipe. Submit sample of swing pipe for approval.
2. Rotor heads use triple elbow swing joint, submit sample of swing joint for approval.

VALVES

Electric Remote-Control valve sized as per manufacturer's recommendations, mechanical joint.

BACKFILL UNDER PAVING

Crushed stone of the following gradation, placed and compacted to 100% as follows:

1. 100% passing ½-inch sieve.
2. 90-100% passing 3/8-inch sieve.
3. 60-85% passing #4 sieve.
4. 40-70% passing #8 sieve.
5. 10-25% passing #50 sieve.
6. 1-5% passing #200 sieve.

VALVE BOX and COVER

Ametek or equal with provision for locking.

AUTOMATIC CONTROLLER

Provide controller with ample stations for system, 120 Volt power will be supplied by others.

CONNECTION TO WATER MAIN

1. Install backflow preventer as per City recommendations.
2. If needed, install irrigation water meter and tap as per City recommendations.
3. Contractor to check pressure at water meter and install a pressure reducing valve if pressure is too excessive for irrigation system.

PART 3 – EXECUTION

GENERAL

Verify existing and proposed locations of all site utilities (i.e. gas, water, electric, telephone) prior to any trenching and laying of pipe.

Coordinate all irrigation work with that of all other site work trades and contractors.

All piping to be installed directly behind curb where possible and in all cases to be routed around existing or proposed site elements, including root balls of proposed trees and shrubs. Refer to the landscape planting Drawings for approximate tree locations and closely coordinate work and schedule with grading and planting work.

Contractor is responsible for full and complete coverage of all areas designated on the Drawings to be irrigated and shall make any necessary adjustments at any time, at no additional cost to the Owner.

Exact location and configuration of islands and other features may vary from that shown on these Drawings. Verify location and configuration at the site prior to trenching for sleeves and piping under paving, and make any minor adjustments to irrigation systems layout. Notify Architect of substantial changes.

Maintain all warning signs, barricades, bracing, flares, and red lanterns as required by safety regulations and local ordinances.

INSTALLATION

General: Lay out according to site coordinates and actual field dimensional controls; verify piping and sleeve locations before trenching.

Excavating and Trenching:

1. Perform all excavation required for installation of the work included under this Section, including shoring and bracing of earth banks to prevent cave-in.
2. Restore all surfaces and existing underground installations damaged or cut as a result of the excavations, to their original condition and in a manner approved by the Owner.
3. All excavation shall be unclassified. Trenches shall be 4-inches wide and to the depth required as specified herein and shown in the Drawings.
4. Over-excavation shall be backfilled at the Contractor's expense with cushion sand. Remove all unsuitable or excess material from the site.
5. Dewater excavations as required for dry work including both surface and ground water.
6. Trenches shall have sides as nearly vertical as possible and bottoms shall be shaped to provide continuous bedding of each section of pipe along its entire length in undisturbed soil or thoroughly compacted fill.
7. Trenches for piping shall be of sufficient depths to provide 12-inches minimum cover for pipes from finished grade. In Public Right-Of-Way, provide 18-inches minimum cover over top of main and lateral lines, or greater depth if required by local authorities.

Pipe Installation:

1. Pipe installation includes all irrigation piping required for water and electrical wiring to complete the automatic irrigation system.
2. Provide firm, uniform bearing for entire length of each pipeline to prevent uneven settlement. Wedging or blocking of pipe will not be permitted. Remove foreign matter or dirt from inside of pipe before joining and keep piping clean by approved means during and after laying of pipe.
3. Assemble pipe and solvent weld. Clean joint thoroughly of dust, dirt, and moisture before applying solvent with non-synthetic bristle brush.
4. Install all pipe and wiring under paving in sleeves as specified, whether or not shown on Drawings. Pressure test all piping under paving prior to paving. All mains and piping under pavement to be pressure tested and activated immediately.

Pipe Fitting:

1. Solvent: Use only solvent recommended by manufacturer to make solvent welded joints. Thoroughly clean pipe and fittings of dirt, dust and moisture before applying solvent.
2. PVC to Metal Connection: Work metal connection first. Use a TEFLON pipe fitting tape on threaded PVC to metal joints. Use only light wrench pressure.
3. Threaded PVC Connections: Where required, use threaded PVC adapters into which pipe may be welded.

Irrigation Heads:

1. Prior to installation, verify configuration of planting areas and tree locations, and stake head layout accordingly. Obtain approval of staked head locations from Landscape Architect before proceeding.
2. Rotor and Pop-up Spray Heads: Attach sprinkler as specified. Adjust riser height after planting.

Wiring:

1. Supply #14 UL listed single strand U.F. direct burial wire from automatic controllers to the valves in accordance with the Specifications. Use PVC conduit for all locations of wire under paving; in landscaped areas, the Contractor may add conduit for wires at his option, in lieu of tucking wire under main lines and lateral lines.
2. Secure all wire-to-wire connections by approved means.
3. All wire from controllers to valves shall be tucked under piping.
4. Test wires prior to backfilling to insure continuity from valve location to controller location. Any wire not indicating continuity shall be repaired or replaced immediately.

Controller:

1. Coordinate controller location with Architect and Contractor.
2. Coordinate with Local Utility Company to provide temporary power to controller location. This Contractor shall make power available for system.
3. Pull valve wires, program controller, and put controller in operations.

Electrical Valves: Supply and install in accordance with the materials list and the manufacturer's recommendations; set in a level position.

Valve Boxes: Set flush with finish grade (adjust as necessary); set over all valves.

Drainage: Place a minimum 12-inches depth of crushed stone under each box containing either water meter, pressure regulator, valve or backflow preventer.

TESTING

Conduct test in presence of Architect. Notify Architect 48-hours in advance of testing date and time:

1. Thoroughly flush out all water lines before installing heads and valves.
2. Operational Test: After backfilling and adjusting heads to final positions, show that system meets coverage requirements and controls function properly. Adjust heads to be not more than ½-inches above finish grade.

BACKFILL AND COMPACTING

Do not backfill until pipe systems have been hydrostatic tested and approved.

After system is operating and required tests and inspections have been made, backfill excavations and trenches as follows:

1. Backfill Under Paving:
   a. Backfill for full depth of excavation with the specified crushed stone. Compact in lifts. Backfill shall be free of debris, large clods, roots or other deleterious material.
   b. Place backfill material evenly in lifts not to exceed 6-inched and compact to 100% percent of maximum density.
   c. Contractor is responsible for establishing compaction in trenches equal to or exceeding overall compaction of paving base. Leave top of trench ready for asphalt by others.
2. Backfill in Landscape Areas:
   a. Backfill trenches with material removed during excavation and compacted to 85% percent except where rock is encountered. In this case lay pipe in a cushion sand bed surrounding the pipe, a minimum of 4-inches deep.
   b. Compact all excavation to prevent settling. Hand rake excavation areas and adjoining areas to leave grade at the previous elevation

and in a good or better condition than before installation. Water-floor compaction will not be permitted.

c. Repair settled areas throughout Guarantee Period, including repair of affected landscape work.

FINAL ADJUSTMENT

After planting and irrigation installation has been completed, make final adjustment to irrigation system prior to the Architect's final inspection.

The system shall be completely flushed to remove any and all debris from the lines by removing nozzles from all heads on ends of lines and turning on the system.

Check all heads for correct operation, alignment, and direction of throw.

Check each section of spray heads for operating pressure, and balance in relation to all other sections by use of the flow adjustment on top of each valve.

Check nozzles for complete coverage. Prevailing wind or other conditions may indicate the arc or angle of spray should be other than as shown on plan. In this case, revise nozzle degree to provide correct coverage, at the Contractor's expense.

Adjust head and valve heights as necessary. Make any other adjustments determined necessary by the Landscape Architect to provide complete and uninterrupted coverage.

CLEAN-UP

Keep site clean on a daily basis by removing trash and debris resulting from construction operation.

Keep all walks, roads, and circulation routes free from debris, materials, and equipment at all items.

Upon completion of the irrigation work, clean up all work and storage areas by removing trash piles, surplus material, or other material from site.

Restore pavement, curbs, ground, and any other disturbed surface to its original condition.

MAINTENANCE AND COMPLETION OF THE WORK

Complete the irrigation system as specified and operate and maintain same from time of installation until Substantial Completion and for a period of 1-year beyond Substantial Completion.
Instruct Owner's personnel in complete operation and maintenance of irrigation system.

ACCEPTANCE AND GUARANTEE

SUBSTANTIAL COMPLETION

Submit request for inspection for Substantial Completion to the Landscape Architect at least 24-hours prior to anticipated date of inspection and testing.

Submit Record Drawings and Maintenance Manual to the Landscape Architect with request for inspection.

Review the work jointly with the Owner and Landscape Architect for Substantial Completion.

Upon completion of repairs and replacements found necessary at time of review, the Owner and Architect will confirm the date of Substantial Completion of the work.

The date of completion of repairs and replacements found necessary at time of Substantial Completion, will constitute the beginning date of the 1-Year Guarantee.

GUARANTEE

Guarantee all work, products, equipment, and materials for 1-year, beginning at date of completion of punch list from Substantial Completion.

During the period of the Guarantee, replace immediately, with no additional compensation, all work not functioning correctly; make adjustments as necessary to maintain complete coverage; make good any other damage, loss, destruction, or failure. Repairs and replacements shall be done promptly and at no additional cost to the Owner.

Repair damage to grade, plants, and other work or property as necessitated due to irrigation defects, repairs, replacement, or adjustment.

If the replacement is not acceptable during or at the end of the Guarantee Period, the Owner may elect either subsequent replacement or credit. Replacement products shall have a similar 1-year guarantee from time of replacement.

Guarantee applies to all losses with the exception of those due to Acts of God, Vandalism, or Owner neglect, as determined by the Landscape Architect.

FINAL INSPECTION AND ACCEPTANCE

At end of Guarantee Period and upon request for inspection, jointly review all guaranteed work for Final Acceptance.

Submit written request for inspection for Final Acceptance to the Landscape Architect at least 2-weeks prior to anticipated date of inspection; include list of work provisionally

accepted and list of work replaced during Guarantee Period.

Upon completion by the Contractor of all required repairs and replacements; the Owner and the Landscape Architect will confirm the date of Final Acceptance of the Work.

END OF SECTION 02810

SECTION 02900 - LANDSCAPING

PART 1 – GENERAL

RELATED DOCUMENTS:

Drawings and general provisions of the contract including General and Supplementary Conditions and Division 1 Specification Sections apply to work of this section.

DESCRIPTION

Provide all labor, equipment, materials and services necessary to complete the Work of this Section, including:

1. Providing, placing, grading topsoil and/or sand for landscape grading as indicated in the Drawings.
2. Providing and installing trees, shrubs, ground covers, and solid sod for landscape planting.
3. Maintenance for thirty days after Substantial Completion, and One (1) Year Guarantee Period.

SUBMITTALS

Qualification Data for firms specified in "Quality Assurance" article to demonstrate their capabilities and experience. Include a list of a minimum of five (5) similar projects completed with the last five (5) years with project name, address, names of Architects and Owners, overall description of scope of work, and contract value.

Materials Lists:

1. Within ten (10) days of award of Contract, submit a complete list of materials and unit prices demonstrating source, availability, and complete conformance with requirements specified.
2. Substitutions not permitted unless proof is submitted to the Landscape Architect's satisfaction that the material is unavailable as specified.

Certificates: Deliver all certificates of inspection to the Engineer.

Product Data: Submit manufacturer's product literature, instructions and guaranteed analysis for fertilizer.

DEFINITIONS

Trees, shrubs, groundcovers, and sod are plant materials listed in Plant Schedule on Drawings.

JOB CONDITIONS

Coordinate the Work of this Section with that of other trades.

Examine conditions under which Work is to be performed and notify Landscape Architect and Landscape Architect in writing of unsatisfactory conditions.

Do not perform Work until conditions are satisfactory and acceptable.

Notify utility companies, prior to digging, for locations of underground utilities (electrical power, telephone, cable, water, sewer and gas) and perform Work in a manner which will avoid all possible damage. Hand excavate as required.

Maintain stakes or other location markers and controls set by others until removal is mutually agreed upon by all parties.

QUALITY ASSURANCE

Codes and Standards:

1. Applicable Sections of Georgia Department of Transportation (GDOT) Standard Specifications for Highway Construction.
2. All plant materials to comply with State and Federal laws relating to inspection for disease and insect control.
3. Plant material quality to conform to *American Standard for Nursery Stock*, American Association of Nurserymen, Inc., 1986, ANSI Z-60.1.1
4. Plant Material nomenclature to conform to:
    a. *Hortus Third*, a Concise Dictionary of Plants Cultivated in the United States and Canada, Macmillan Publishing Company, Inc., New York, 1976 Edition.
    b. Names not listed in the above standard to comply with those most commonly used in the trade.
    c. In all cases, botanical names take precedence over common names.

Installer Qualifications: Firm shall hold Georgia General Contractor's License for Landscaping. Firm experienced in the successful installation of a minimum of five (5) projects within the past five (5) years similar in scope, quality, and contract value to that indicated for this project. Firm shall have sufficient labor, equipment and financial resources to complete the Work of this Section.

Personnel: Use adequate numbers of skilled workers trained and experienced in the Work and familiar with requirements and methods needed for performance of the Work. At all times during planting operations, have on the site a person knowledgeable in horticultural practices as a superintendent.

Inspection and Approval:

1. All plant material is subject to inspection and approval in the field or nursery before digging, by the Landscape Architect.
2. All plant materials and other materials are subject to inspection and/or rejection at the site before planting or placing, or at any other time.
3. Attach secure, durable, legible waterproof labels, stating correct botanical and common names as specified, to a least one (1) plant, bundle or container of each plant variety.
4. Remove from site plant materials or other materials not complying with specified requirements within 5 days of rejection.
5. Approval is for visual qualities only and does not relieve the Contractor of his obligation to provide materials and workmanship in full compliance with the requirements of the Contract Documents.

PRODUCT DELIVERY, STORAGE AND HANDLING

Deliver packaged materials in manufacturer's original containers showing weight, analysis and name of manufacturer. Protect materials from deterioration during delivery, and while stored at the site.

Deliver all non-packaged or non-containerized materials to site in a manner that will prevent loss, damage, deterioration or contamination.

Store all materials in approved locations to prevent loss, damage, deterioration or contamination.

Deliver, storage and handling of all plant materials shall conform to GDOT Specifications and the following:

1. Deliver freshly dug plants, which have not been in cold storage or heeled-in.
2. Do not prune prior to delivery.
3. Do not bend or bind trees or shrubs in such a manner as to damage bark, break branches or destroy natural shape.
4. Provide necessary protective covering during transport and delivery.
5. Deliver plants after preparations for planting have been completed and approved, and plant immediately.

SITE MAINTENANCE

Keep roads, paving and structures adjacent to maintenance operations clean and free of obstructions, mud and debris at all times.

Do not permit flushing of roads or disposal of dirt or debris into sewers or drainage ditches.

Control dust from maintenance operations.

PART 2 – PRODUCTS

SOIL MATERIALS

Topsoil:

1. This Contractor shall furnish topsoil in sufficient quantity, to complete grading and planting operations as specified.
2. Characteristics of topsoil to be furnished:
   a. Fertile, friable, naturally occurring. Free of stones, clay, lumps, hardpan, roots, stumps, branches, sticks and other debris larger than two (2) inches in any dimension; free of noxious weeds, grasses, seeds, plants, extraneous matter and any substance harmful to plant growth. Topsoil from open fields will not be accepted.
   b. Ph: 5.0 to 7.0
   c. Organic Matter: 5% to 10%
   d. Sand: 50% to 70%
   e. Silt: less than 30%
   f. Clay: 10% to 25%
   g. Permeability Rate of 5 x 10 <-3> centimeters or greater at 85% compaction.

Notify Engineer of location of proposed topsoil for his inspection before testing or transporting to site.

Topsoil testing for furnished topsoil: Sample and test, minimum of three (3) samples, for compliance with specified characteristics. Tests to be performed by soil testing lab approved in advance by Engineer, by this Contractor at his expense. Submit Soil Test Reports to Landscape Architect for approval before transporting topsoil. Amend per recommendations of Soil Test Report and as approved to meet specified characteristics.

SOIL AMENDMENTS

Fertilizer:

1. Characteristics:
   a. Uniform in composition.
   b. Dry and free-flowing.
   c. Commercially available.
   d. Conforming to the State of Federal Fertilizer Laws.
2. Of the formulation recommended in the Soil Test Report as specified.

Lime:

1. Ground or crushed agricultural lime.
2. Containing not less than 85% of total carbonates.
3. 90% passing 20-mesh screen.
4. Not less than 50% passing a 60-mesh screen.
5. Dry and free-flowing.
6. Apply at rate specified in Soil Test Report.

LANDSCAPE PLANTING MATERIALS

Water:

1. Provide fresh water, free of impurities or any substance harmful to plant growth.
2. Provide all hose, attachments, and accessories necessary to complete the Work as specified.

Topsoil: Refer to this Section, for specified topsoil for use in all planting operations.

Topsoil Mix:

1. Prepare all topsoil mix used in tree and shrub pits and ground cover beds in the following proportions:
   a. 2 parts by volume topsoil as specified.
   b. 1 parts by volume decomposed organic matter.
2. Add three (3) pounds of 12-6-6 fertilizer to each cubic yard of topsoil mix during the mixing process, for all plants.

Decomposed Organic Matter:

1. Well rotted organic matter.
2. Containing no weeds, grasses or plants, their seeds, or any substance harmful to plant growth.
3. Of uniform composition.
4. Acceptable Materials:
   a. Mushroom Compost
   b. Ground pine bark
   c. Approved equal.

Mulch:

1. Pine straw on slopes: Free from leaves, twigs, insects, grasses, weeds, plants and their seeds, other foreign material and any substances harmful to plant growth.

2. Ground Pine bark: Free from leaves, twigs, insects, grasses, weeds, plants and their seeds, other foreign material and any substances harmful to plant growth.

Seed:

1. Use Cynodon Dactylon (Common Bermuda) for seeding during the warm months, defined as April through September. Seed at a rate of 50 lbs. per acre.
2. Use Winter Rye Grass as a temporary grass during the cool months, defined as October to March.

Solid Sod:

1. Obtain solid sod from sources having growing conditions similar to the area to be planted.
2. Sod shall be true to name and type of the species named in the plant Schedule.
3. Sod shall be 100% percent of the type specified and shall contain no other grasses.
4. Sod shall be well cultivated and weed, disease and insect-free, of good texture, and free from extraneous roots, stones and other foreign material. The presence of nutgrass or other weeds shall be cause for rejection and replacement prior to Substantial completion, or during the Guarantee Period.

Plant Material:

1. Definition: Trees and shrubs listed in the Plant Schedule in the Drawings.
2. General:
   a. Species, sizes, manner in which to be planted, and approximate quantities to complete the planting as indicated are included in the Plant Schedule.
   b. Scientific and common plant names conform to those given in *Hortus Third*, or are those generally accepted in the nursery trade.
3. Quality:
   a. Conform to the standards set forth in *American Standard for Nursery Stock.*
   b. Standard quality and first-class representatives of their species or variety and true to name and type.
   c. Nursery-grown, unless specified otherwise.
   d. In compliance with State and Federal laws relating to disease and insect infestation; file certificates with Landscape Architect.
   e. Having normal, well-developed branches and vigorous root systems, free from defects, decay, disfigurements, sun scaled, bark

abrasions, plant diseases, insect pests or eggs, borers and any and all infestations.

4. Rejection of plants for:
   a. Lack of compactness or proper proportion;
   b. Week, thin growth in rows too close together;
   c. Cut back from larger stock to meet specified requirements;
   d. Undersized, dry, cracked or broken balls, or plants that are loose in their balls;
   e. Root bound within container or ball;
   f. Lacking proper proportion as to height and spread and specified characteristics or plant material;
5. Size:
   a. Sizes and proportions of all plant materials shall equal those recommended by the *American Standard for Nursery Stock* for specified grades.
   b. Measure plants before pruning, with branches in normal position.
   c. Equal or exceed measurements specified in Plant Schedule, which are the minimum acceptable; provide 50-percent of plant material maximum size specified.
   d. Height and spread dimensions: General body mass of plant, not from branch tip to tip.
   e. Well-proportioned as to height; reject plants which meet specified measurements but do not possess an overall balance.
   f. Take caliper measurement on trunk six-inches above natural ground level up to and including four-inch caliper size; twelve-inches above natural ground level for larger sizes.
   g. B&B plants shall have firm natural balls of a diameter and depth not less than that recommended in *American Standard For Nursery Stock.*
   h. Container-grown plants: Conform to standards set forth in *American Standard For Nursery Stock* for container-grown plants.
6. Quantity: Furnish plants in sufficient quantity to satisfy the intent of the Drawings and Specifications. Locate in sufficient quantity to that time is not lost if some plants are rejected.

Guying and Staking Materials:

1. Wood Stakes:
   a. Pressure-treated Southern Yellow Pine, or other approved wood, 2-inches x 4-inches x length specified in the Drawings, pointed at one end.
   b. Free from insects and fungi.
2. Wire: Pliable #10 or #12 gauge galvanized steel wire, doubled and twisted.
3. Turnbuckles: As detailed and approved by Landscape Architect.

4. Protective Hose:
    a. Reinforced fiber-bearing rubber hose.
    b. Black.
    c. May be second-hand.
    d. Not less than 2-inches inside diameter.
5. Arbor Tie (are acceptable)

PART 3 – EXECUTION

INSTALLATION

Planting Season:

1. A period of acceptable weather conditions, during seasons in which satisfactory results can be expected as determined by acceptable practice in the locality and approved by the Landscape Architect.
2. Commence planting operations as soon as portions of the site are available, as approved by the Landscape Architect.

Site Inspection:

1. Examine areas and conditions under which Work is to take place.
2. Inform Landscape Architect in writing, prior to planting, of conditions existing which could be considered detrimental to the successful planting and growth of any plant material, including but not limited to, subsurface drainage conditions, utility locations, subgrade compaction, percolation rate and elevations.

Site Preparation:

1. Subgrade will be established by others at 4-inches below finished grade in all areas to receive planting around the building, and 1-inch for areas to be sodded, unless greater topsoil depth is indicated herein or on Drawings for deeper bed preparation.
    a. Topsoil depth for shrub and groundcover beds is 6-inches and is by this Contractor.
    b. Do not place or spread topsoil in an area until subgrade is approved by Landscape Architect and is acceptable to this Contractor.
2. Remove all vegetative growth from topsoil by approved means before commencing with planting operations.
3. Remove all unwanted vegetative growth from areas designated to receive new planting or sod with chemical herbicide or by other approved means, prior to scarifying and placing topsoil.

4. Remove extraneous matter measuring 1-2-inch or larger in any dimension from top 4-inches of placed topsoil.
5. Uniformly grade areas including adjacent transition areas to line and grade shown on Drawings.
6. Obtain approval of finished grades before proceeding with planting operations; eliminate irregularities and ponding.
7. Protect stockpiled or spread topsoil from erosion by force of wind, water, or other force; re-establish eroded, rutted or settled grades to proper finished grade.

Topsoil Mix:

1. Prepare topsoil mix off site, using approved topsoil.
2. Obtain approval of topsoil mix before delivery to site, and prior to commencing planting operations. Do not mix in place with placed topsoil.
3. Place topsoil mix as backfill for tree and shrub pits and beds as drawn. Place 2-inches of topsoil mix in all shrub beds unless otherwise indicated on the Drawings.
4. Protect stockpiled topsoil mix from erosion by force of wind of water, or damaged by traffic.

Plant Location Staking:

1. Stake plant locations and areas for approval prior to planting.
2. Do not dig plant pits prior to obtaining Landscape Architect's approval of plant locations.
3. Make adjustments in plant locations as directed.
4. If underground obstructions are encountered in planting areas that would prevent the installation of the plant material, contact the Landscape Architect immediately. Alternate locations may be selected by the LANDSCAPE ARCHITECT at no additional cost to the Owner.

Planting:

1. Place plants comprising a planting composition in approved staked locates for approval by Landscape Architect.
2. Planting pits and beds:
   a. Drainage:
      1) This Contractor is responsible for achieving and maintaining adequate drainage from all planting beds. Use specified drainage system, or other approved means, in all tree pits.
      2) 48-hours prior to planting, test each plant pit for adequate drainage.
      3) Owner reserves the right to test tree or plant pits at any time, before or after planting, for adequate drainage. Correct immediately any inadequate drainage encountered.

b. Pits are generally circular in outline with vertical sides.
c. Tree pits: 3-feet greater in diameter than ball or root spread.
d. Shrub pits: 1-foot greater in diameter than ball or root spread.
e. Excavate to specified dimensions and dispose of excavated material off site.
f. Prepare as specified in detail Drawings.

3. Setting plants:
   a. Set plants uniformly 2-inches to 4-inches higher than surrounding grade or as necessary to provide adequate positive drainage away from roots. Slope soil gradually from saucer.
   b. Cut rope, wire or string from top of ball after plant has been set; turn down and bury burlap.
4. Backfilling plants:
   a. Backfill to 2/3 full with specified topsoil mix.
   b. Water thoroughly to eliminate air pockets and settling before filling to grade.
   c. Form shallow saucer at plant pit edge to hold water.
   d. Water in thoroughly.
5. Staking:
   a. Inspect tree trunks for injury, improper pruning and insect infestation; take corrective measure.
   b. Immediately after planting, stake trees as detailed.
6. Pruning:
   a. Do not prune plants without approval.
   b. Prune after plants are in place and *ONLY* at the direction of Landscape Architect.
   c. Main leaders of trees to remain intact.
   d. Paint all cuts over 2-inch diameter with approved tree wound dressing.
7. Finished Grading: Hand grade and rake planting areas so that grades conform to surrounding areas and surface water drains freely.
8. Mulching:
   a. Mulch all plant pits and beds with 4-inch deep specified mulch.
   b. Spread mulch solid in planting beds.
   c. Thickness is uniform throughout.
   d. Mulch for trees shall be eight (8) feet in diameter from base of tree.

Solid Sod:

1. Preparation of Sod Bed:
   a. Spread and scarify amended topsoil as specified.
   b. Rake and otherwise manipulate to form smooth-draining grades, remove all stones and clay lumps 1 inch in diameter or larger.
   c. Leave the surface of the topsoil 1-1/2-inches below finished grade.

d. Do not move heavy objects over areas to be sodded after the soil has been prepared. Planting in compacted areas will not be permitted.

e. The finished surface of the areas to be sodded shall be approved by the Landscape Architect prior to sod placement.

2. Solid Sod Placement:

a. Lay sod when sod bed is not excessively wet or frozen, but when soil is damp for a depth of 4-inches.

b. Immediately upon approval of bed preparation, lay sod smoothly, edge-to-edge, with staggered joints.

c. Press firmly into contact with sod bed by tamping or rolling by approved means to eliminate all air pockets, providing a true and even surface, and assuring knitting.

d. Fill cracks between sod blocks with strips of living sod, topsoil, or humus.

e. Water thoroughly by use of sprinkler or spray, without erosive force.

Seeding:

1. Furnish, sow, establish and maintain an acceptable growth of specified grass over all disturbed areas not otherwise designated to receive planting, mulch or sod.

2. Ground Preparation: Spread and scarify amended topsoil as specified. Ground preparation shall consist of cultivation to loose depth approximately four (4) inches (minimum). The plowing, harrowing, cultivating, and all other operations shall be performed with proper equipment and in such a manner as to break up all clods, lumps or earth balls, and remove all boulders, stumps, large roots, or other particles which will interfere with the Work. The resultant surface is to be smooth, uniform, loose, well broken, and fine grained soil providing a suitable bed for seed grass. The ground shall be plowed to the required depth, then cultivated with a rotary tiller and/or disc harrow, in both directions if feasible, until approved. In small or inaccessible areas use of hand tools will be permitted. After removal of all large particles which cannot be broken, the surface shall then be harrowed and tilled. Add sufficient water to wet the soil in order to prepare the ground.

3. Sowing:

a. Sowing seed shall, in general, follow promptly after incorporation of fertilizer in a uniform manner at the rates specified by Soil Test Reports.

b. Sowing shall be done by approved mechanical seeders. Without prejudice to power equipment or seeders of other types and makes, hand operated cyclone sowers, in sufficient number, will be considered mechanical seeders. No sowing shall be done during

windy weather, or when the prepared surface is crusted, or when the ground is frozen, wet or otherwise in a non-tillable condition.

c. Care shall be exercised during covering operations to preserve the line, grade and cross-section of the seeded areas and to see that areas adjacent to pavement, curbs, etc., are not left higher than the paved surface. Unless otherwise directed, after seed has been sown the seedbed shall be compacted immediately by means of a cultipacker, light roller or approved drag.

4. Mulching: Apply hay or straw mulch to seeded areas at specified rate within 24 hours after the area has been seeded.

5. Care During Construction:
   a. Water, fill washes, and otherwise protect and maintain the seeded areas including any mulch or cover used until the Work is accepted.
   b. Repair damage caused by pedestrian and/or vehicular traffic, or other causes.

6. Satisfactory Stand:
   a. The acceptance of areas designated to be seeded under this Section will be based on verification of a satisfactory stand of grass as determined by an on-site observation by the Landscape Architect.
   b. A satisfactory stand is defined as a cover of living grass of specified species, after true leaves are formed in which no gaps larger than five (5) inches square occur. Areas viewed by the Landscape Architect to be solid rock will be exempt from this requirement.
   c. If a satisfactory stand is not established in any area, the area shall be reseeded until a satisfactory stand is established, without additional compensation.

7. Should the site be ready for seeding during a season when, in the opinion of the Landscape Architect, the specified grass will not form a satisfactory cover, establish a cover of Winter Rye and reseed specified grass at earliest time when acceptable growth can be established at no additional cost to the Owner.

Hydroseeding:

1. Hydroseed all slopes with a slope of 2:1 or greater with species specified in the Plant Schedule.

LANDSCAPE MAINTENANCE

Provide labor, materials, equipment and means for proper maintenance of all materials and workmanship included in the Work of this Section until Substantial Completion and the beginning of the 30-day maintenance period.

Maintenance for 30 days after Substantial Completion is included in the Work of this Section.

SUBSTANTIAL COMPLETION AND GUARANTEE

Substantial Completion and Payment:

1. Submit request for inspection of Substantial Completion, with a punchlist of contract items to complete, to Landscape Architect at least 1-week prior to anticipated date of inspection.
2. Review the Work jointly with the Landscape Architect for Substantial Completion.
3. Upon completion of repairs and replacements found necessary at time of review, the Landscape Architect will confirm the Date of Substantial Completion of the Work.
4. Substantial Completion constitutes the beginning date of the 1-Year Guarantee Period.

Basis of Acceptance:

1. Planted trees and shrubs will be counted as individual units, complete, in place and planted in accordance with plans and specifications. Each unit will include the installed plant, topsoil, topsoil mix, mulch and staking apparatus.
2. Solid sod will be counted in square yards provided and installed, including sod, ground preparation and topsoil, in accordance with plans and specifications.
3. Plant pit drainage will be counted as incidental to the Work, and will not be counted separately for payment.
4. The cost of mobilization (including all provisions of General Requirements, and Maintenance until Substantial Completion as specified herein are considered incidental to the Work and will not be counted as separate items for payment.

Guarantee:

1. Guarantee all materials and workmanship for a period of 1-year from the Date of Substantial Completion.
2. During the period of the Guarantee, replace with no additional compensation, and as soon as weather permits, all dead plant materials and all materials not in a thriving condition; replace all other workmanship and materials which are unsatisfactory in the opinion of the Landscape Architect; make good any other damage, loss, destruction, or failure to flourish sufficiently as the result of inferior or defective materials or workmanship, including, but not limited to inadequate drainage.

3. All replacement material shall match the size attained by original materials at the time of the replacement.
4. Remove dead or dying material from the site within 5 days of notice.
5. Repair grades and other Work necessitated due to planting replacements.
6. If the replacement is not acceptable during or at the end of the Guarantee Period, the Owner may elect either subsequent replacement or credit. Replacements shall have a similar 1-year Guarantee from date of replacement.
7. Guarantee applies to losses or damage other than those due to vandalism, Owner neglect, or Acts of Nature, as determined by the Landscape Architect. Acts of Nature, but may not be limited to, high winds of hurricane or tornado force, sleet, hail, freezing rain, and extreme cold (as determined by the Landscape Architect). Contractor agrees to replace losses due to Acts of Nature at fifteen percent (15%) less than original contract price for the damaged work.

FINAL INSPECTION AND ACCEPTANCE

Contractor is responsible for contacting the Landscape Architect at the end of the Guarantee Period to schedule final inspection. Should the Contractor fail to contact the Landscape Architect at this time, the Guarantee Period is automatically extended until he does so.

At the end of the Guarantee Period, submit request for inspection for Final Acceptance to Landscape Architect at least 1-week prior to anticipated date of inspection; include list of Work substantially accepted and list of Work replaced during Guarantee Period.

Upon request for inspection, jointly review with Landscape Architect all guaranteed Work for Final Acceptance.

Remove tree staking apparatus and saucers from all trees, unless otherwise directed; replace mulch to specified thickness.

Upon completion by the Contractor of all required repairs and replacements, the Landscape Architect will confirm the date of Final Acceptance of the Work.

END OF SECTION 02900

SECTION 03310 - CONCRETE WORK

PART 1 – GENERAL

RELATED DOCUMENTS:

Drawings and general provisions of the contract including General and Supplementary Conditions and Division 1 Specification Sections apply to work of this section.

DESCRIPTION OF WORK:

Extent of concrete work is shown on drawings.

QUALITY ASSURANCE:

Codes and Standards: Comply with provisions of following codes, specifications and standards, except where more stringent requirements are shown or specified:

1. ACL 301 "Specifications for Structural Concrete for Buildings".
2. ACI 318 "Building Code Requirements for Reinforced Concrete"
3. Concrete Reinforcing Steel Institute, "Manual of Standard Practice".

Concrete Testing Service: The **Owner** will engage and pay a testing laboratory to perform material evaluation tests.

Materials and installed work may require retesting, as directed by Architect, at anytime during progress of work. Provide free access to material stockpiles and facilities. Retesting of rejected materials and installed work, shall be done at Contractor's expense.

SUBMITTALS:

Product Data: Submit data for proprietary materials and items, including reinforcement and forming accessories, admixtures, patching compounds, joints systems, curing compounds, dry-shake finish materials and others as requested by Architect.

Shop Drawings Reinforcements: Submit shop drawings for fabrication, bending and placement of concrete reinforcement. Comply with ACI 315 "Manual of Standard Practice for Detailing Reinforced Concrete Structures" showing bar schedules, stirrup spacing, diagrams of bent bars, arrangement of concrete reinforcement.

Material Certificates: Provide materials certificates in lieu of materials laboratory test reports when permitted by Architect. Material certificates shall be signed by manufacturer and Contractor, certifying that each material item complies with, or exceeds, specified requirements.

FORM MATERIALS:

Forms for Exposed Finish Concrete: Unless otherwise indicated, construct formwork for exposed concrete surfaces with plywood, metal, metal-framed plywood faced or other acceptable panel-type surfaces. Furnish in largest practicable sizes to minimize number of joints and to conform to joint system shown on drawings. Provide form material with sufficient thickness to withstand pressure of newly-placed concrete without bow or deflection.

Use plywood complying with U. S. Product Standard PS-1 "B-B (Concrete Form) Plywood", Class I, Exterior Grade or better, mill-oiled and edge-sealed, with each piece bearing legible inspection trademark.

Forms for Unexposed Finish Concrete: Form concrete surfaces which will be unexposed in finished structure with plywood, lumber, metal, or other acceptable material. Provide lumber dressed on at least two (2) edges and one (1) side for tight fit.

Form Coatings: Provide commercial formulation form-coating compounds that will not bond with, stain nor adversely affect concrete surfaces, and will not impair subsequent treatments of concrete surfaces.

REINFORCING MATERIALS:

1. Reinforcing Bars: ASTM A 615, Grade 60, deformed, unless otherwise noted.
2. Steel Wire: ASTM A 82, plain, cold-drawn, steel.
3. Welded Wire Fabric: ASTM A 185, welded steel wire fabric.

Supports for Reinforcement: Provide supports for reinforcement including bolsters, chairs, spacers and other devices for spacing, supporting and fastening reinforcing bars and welded wire fabric in place. Use wire bar type supports complying with CRSI specifications, unless otherwise acceptable.

For slabs-on-grade, use supports with sand plates or horizontal runners where base material will not support chair legs.

For exposed to view concrete surfaces, where legs of supports are in contact with forms, provide support with legs which are plastic protected (CRSI, Class I) or stainless steel protected (CRSI, Class 3).

CONCRETE MATERIALS:

Portland Cement: ASTM C 150, Type 1, unless otherwise acceptable to Architect.

Use one brand of cement throughout project, unless otherwise acceptable to Architect.

Normal Weight Aggregate: ASTM C 33, and as herein specified. Provide aggregate from a single source for all concrete.

Do not use fine or coarse aggregates containing spalling-causing deleterious substances.

Water: Drinkable.

Air-Entraining Admixture: ASTM C 260.

Manufacturers: The following manufacturers' products have been used to establish minimum standards for materials, workmanship and function:

”Air-Mix", Evclid Chemical Co.
"Sika-Air", Sika Corp.
"Darex AEA", W. R. Grace

Equal products of other manufacturers may be used in the work, provide such products have been approved, by the Architect, not less than five (5) days prior to scheduled bid opening.

Water-Reducing, Non-Chloride Accelerator Admixture: ASTM C 494, Type E, and containing not more than 0.1% chloride ions.

Manufacturers: The following manufacturers' products have been used to establish minimum standards for materials, workmanship and function:

"Accelguard 80"; Euclid Chemical Company
"Pozzolith High Gally"; Master Builders

Equal products of other manufacturers may be used in the work, provide such products have been approved, by the Architect, not less than five (5) days prior to scheduled bid opening.

Water-Reducing, Retarding Admixture: ASTM C 494, Type D, and contain not more than 0.1% chloride ions.

Manufacturers: The following manufacturers' products have been used to establish minimum standards for materials, workmanship and function:

"Edoco 20006"; Edoco Technical Products
"Pozzolith 300-R"; Master Builders
"Eucon Retarder 75"; Euclid Chemical Company
"Daratard"; W. R. Grace
"Plastiment"; Sika Chemical Company

Equal products of other manufacturers may be used in the work, provide such products have been approved, by the Architect, not less than five (5) days prior to scheduled bid opening.

Certification: Provide admixture manufacturer's written certification that chloride ion content complies with specified requirements.

Calcium chloride or admixtures containing more than 0.1% chloride ions are not permitted.

RELATED MATERIALS:

Moisture Barrier: Provide moisture barrier cover over prepared base material where indicated. Use only materials which are resistant to decay when tested in accordance with ASTM E 154, as follows:

1. Polyethylene sheet not less than 10 mils thick.

Absorptive Cover: Burlap cloth made from jute or kenaf, weighing approximately 9 oz. per sq. yd., complying with AASHTO M 182, Class 2.

Moisture-Retaining Cover: One of the following, complying with ASTM C 171.

1. Waterproof paper
2. Polyethylene film.
3. Polyethylene-coated burlap.

Liquid Membrane Forming Curing Compound: Liquid type membrane forming curing compound complying with ASTM C 309, Type 1-D, Class A unless other type acceptable to Architect. Moisture loss not more than 0.055 gr./sq. cm. when applied at 200 sq. ft./gal. Equal to "Kure-N-Seal" - 30; Sonneborn-Contech

Manufacturers: The following manufacturers' products have been used to establish minimum standards for materials, workmanship and function:

Master Builders
Euclid Chemical Company
A.C. Horn
The Burke Company

Equal products of other manufacturers may be used in the work, provide such products have been approved, by the Architect, not less than five (5) days prior to scheduled bid opening.

Bonding Compound: Polyvinyl acetate or acrylic base, re-wettable type.

Manufacturers: The following manufacturers' products have been used to establish minimum standards for materials, workmanship and function:

"Welcrete"; Larsen Products
"EucoWeld"; Euclid Chemical Company
"Hornweld"; A. C. Horn
"Sonocrete"; Sonneborn-Contech
"Acrylic Bondcrete"; The Burke Company

Equal products of other manufacturers may be used in the work, provide such products have been approved, by the Architect, not less than five (5) days prior to scheduled bid opening.

Epoxy Adhesive: ASTM C 881, two component material suitable for use on dry or damp surfaces. Provide material "Type", "Grade", and "Class" to suit project requirements.

Manufacturers: The following manufacturers' products have been used establish minimum standards for materials, workmanship and function:

"Epoxtite"; A. C. Horn
"Sikadur Hi-Mod"; Sika Chemical Corporation
"Euco Epoxy 463 or 615"; Euclid Chemical Company
"Patch and Bond Epoxy"; The Burke Company
"Sure-Poxy"; Kaufman Products, Inc.

Equal products of other manufacturers may be used in the work, provide such products have been approved, by the Architect, not less than five (5) days prior to scheduled bid opening.

PROPORTIONING AND DESIGN OF MIXES:

Prepare design mixes for each type and strength of concrete by either laboratory trial batch or field experience methods as specified in ACI 301. If trial batch method used, use an independent testing facility acceptable to Architect for preparing and reporting proposed mix designs. The testing facility shall not be the same as used for field quality control testing unless otherwise acceptable to Architect.

Submit written reports to Architect of each proposed mix for each class of concrete at least 15 days prior to start of work. Do not begin concrete production until mixes have been reviewed by Architect.

Design mixes to provide normal weight concrete as indicated on drawings and schedules.

Adjustment to Concrete Mixes: Mix design adjustments may be requested by Contractor when characteristics of materials, job conditions, weather, test results, or

other circumstances warrant; at no additional cost to Owner and as accepted by Architect. Laboratory test data for revised mix design and strength results must be submitted to and accepted by Architect before using in work.

Admixtures:

Use water-reducing admixture in all concrete for ease of placement and workability.

Use non-chloride accelerating admixture in concrete slabs placed at ambient temperatures below 50 degrees F.

Use air-entraining admixture in all concrete, unless otherwise indicated. Add air-entraining admixture at manufacturer's prescribed rate to result in concrete at point of placement having total air content of 6% with a tolerance of plus-or-minus 1-1/2%.

Slump Limits: Proportion and design mixes to result in concrete slump at point of placement as follows:

1. Ramps, slabs and sloping surfaces: 3" to 5".
2. Reinforced foundation systems: 2" to 5".
3. Other concrete: 3" to 5".

CONCRETE MIXES:

Ready-Mix Concrete: Comply with requirements of ASTM C 94, and as herein specified.

During hot weather, or under conditions contributing to rapid setting of concrete, a shorter mixing time than specified in ASTM C 94 may be required.

When air temperature is between 85 degrees F and 90 degrees, reduce mixing and delivery time from 1-1/2 hours to 75 minutes, and when air temperature is above 90 degrees F, reduce mixing and delivery time to 60 minutes.

FORMS:

Design, erect, support, brace and maintain formwork to support vertical and lateral loads that might be applied until such loads can be supported by concrete structure. Construct formwork so concrete members and structures are of correct size, shape, alignment, elevation and position.

Design formwork to be readily removable without impact, shock or damage to cast-in-place concrete surfaces and adjacent materials.

Construct forms to sizes, shapes, lines and dimensions shown and to obtain accurate alignment, location, grades, level and plumb work in finished structures. Provide for

openings, off-sets, sinkages, keyways, recesses, moldings, rustications, reglets, chamfers, blocking, screeds, bulkheads, anchorages and inserts and other features required in work. Use selected materials to obtain required finishes. Solidly butt joints and provide back-up at joints to prevent leakage of cement paste.

Fabricate forms for easy removal without hammering or prying against concrete surfaces. Provide crush plates or wrecking plates where stripping may damage cast concrete surfaces. Provide top forms for inclined surfaces where slope is too steep to place concrete with bottom forms only. Kerf wood inserts for forming keyways, reglets, recesses and the like, to prevent swelling and for easy removal.

Provide temporary openings where interior area of formwork is inaccessible for cleanout, for inspection before concrete placement, and for placement of concrete. Securely brace temporary openings and set time to forms to prevent loss of concrete mortar. Locate temporary openings on forms at inconspicuous locations.

Chamfer exposed corners and edges as indicated, using wood, metal, PVC or rubber chamfer strips fabricated to produce uniform smooth lines and tight edge joints.

Form Ties: Factory-fabricated, adjustable-length, removable, or snap-off metal form ties, designed to prevent form deflection, and to prevent spalling concrete surfaces upon removal.

Unless otherwise indicated, provide ties so portion remaining within concrete after removal is 1" inside concrete and will not leave holes larger than 1" diameter in concrete surface.

Provisions for Other Trades: Provide openings in concrete formwork to accommodate work of other trades. Determine size and location of openings, recesses and chases from trades providing such items. Accurately place and securely support items built into forms.

Cleaning and Tightening: Thoroughly clean forms and adjacent surfaces to receive concrete. Remove chips, wood, sawdust, dirt or other debris just before concrete is placed. Retighten forms and bracing after concrete placement is required to eliminate mortar leaks and maintain proper alignment.

PLACING REINFORCEMENT:

Comply with Concrete Reinforcing Steel Institute's recommended practice for "Placing Reinforcing Bars" for details and methods of reinforcement placement and supports, and as herein specified.

Clean reinforcement of loose rust and mill scale, earth, ice and other materials which reduce or destroy bond with concrete.

Accurately position, support and secure reinforcement against displacement by formwork, construction or concrete placement operations. Locate and support reinforcing by metal chairs, runners, bolsters, spacers and hangers as required.

Place reinforcement to obtain at least minimum coverages for concrete protection. Arrange, space and securely tie bars and bar supports to hold reinforcement in position during concrete placement operations. Set wire ties so ends are directed into concrete, not toward exposed concrete surfaces.

Install welded wire fabric in as long lengths as practicable. Lap adjoining pieces at least one full mesh and lace splices with wire. Offset end laps in adjacent widths to prevent continuous laps in either direction.

JOINTS:

Construction Joints: Locate and install construction joints as indicated, or if not indicated, locate so as not to impair strength and appearance of the structure, as acceptable to Architect.

Place construction joints perpendicular to main reinforcement. Continue reinforcement across construction joints.

Isolation Joints in Slabs-On-Ground: Construct isolation joints in slabs-on-ground at points of contact between slabs on ground and vertical surfaces, such as column pedestals, and elsewhere as indicated.

Joint filler and sealant materials are specified in Division-7 sections of these specifications.

Construction Joints in Slabs-On-Ground: Construct construction joints in slabs-on-ground to form panels of patterns no larger than 600 square feet and as shown and as detailed. An alternative control joint detail may be inserts 1/8" to 1/4" wide x 1/4 of slab depth.

Form contraction joints by inserting premolded plastic, hardboard strip into fresh concrete until top surface of strip is flush with slab surface. Tool slab edges round on each side of insert. After concrete has cured, remove inserts and clean groove of loose debris, fill groove with joint sealant.

Joint sealant material is specified in Division-7 sections of these specifications.

INSTALLATION OF EMBEDDED ITEMS:

General: Set and build into work anchorage devices and other embedded items required for other work that is attached to, or supported by, cast-in-place concrete. Use setting drawings, diagrams, instructions and directions provided by suppliers of items to be attached thereto.

Edge Forms and Screed Strips for Slabs: Set edge forms or bulkheads and intermediate screed strips for slabs to obtain required elevations and contours in finished slab surface. Provide and secure units sufficiently strong to support types of screed strips by use of strike-off templates or accepted compacting type screeds.

PREPARATION OF FORM SURFACES:

Clean re-used forms of concrete matrix residue, repair and patch as required to return forms to acceptable surface condition.

Coat contact surfaces of forms with a form-coating compound before reinforcement is placed.

Thin form-coating compounds only with thinning agent of type, and in amount, and under conditions of form-coating compound manufacturer's directions. Do not allow excess form-coating material to accumulate in forms or to come into contact with in-place concrete surfaces against which fresh concrete will be placed. Apply in compliance with manufacturer's instructions.

CONCRETE PLACEMENT:

Replacement Inspection: Before placing concrete, inspect and complete formwork installation, reinforcing steel, and items to be embedded or cast-in. Notify other crafts to permit installation of their work; cooperate with other trades in setting such work. Moisten wood forms immediately before placing concrete where form coatings are not used.

Coordinate the installation of joint materials and moisture barriers with placement of forms and reinforcing steel.

General: Comply with ACI 304 "Recommended Practice for Measuring, Mixing, Transporting and Placing Concrete", and as herein specified.

Deposit concrete continuously or in layers of such thickness that no concrete will be placed on concrete which has hardened sufficiently to cause the formation of seams of planes of weakness. If a section cannot be placed continuously, provide construction joints as herein specified. Deposit concrete as nearly as practicable to its final location to avoid segregation.

Placing Concrete in Forms: Deposit concrete in forms in horizontal layers not deeper than 24" and in a manner to avoid inclined construction joints. Where placement

consists of several layers, place each layer while preceding layer is still plastic to avoid cold joints.

Consolidate placed concrete by mechanical vibrating equipment supplemented by hand-spading, rodding or tamping. Use equipment and procedures for consolidation of concrete in accordance with ACI recommended practices.

Do not use vibrators to transport concrete inside forms. Insert and withdraw vibrators vertically at uniformly spaced locations not farther than visible effectiveness of machine. Place vibrators to rapidly penetrate placed layer at least 6" into preceding layer. Do not insert vibrators into lower layers of concrete that have begun to set. At each insertion limit duration of vibration to time necessary to consolidate concrete and complete embedment of reinforcement and other embedded items without causing segregation of mix.

Placing Concrete Slabs: Deposit and consolidate concrete slabs in a continuous operation, within limits of construction joints, until the placing of a panel or section is completed.

Consolidate concrete during placing operations so that concrete is thoroughly worked around reinforcement and other embedded items and into corners.

Bring slab surfaces to correct level with straightedge and strike-off. Use bull floats or darbies to smooth surface, free of humps or hollows. Do not disturb slab surfaces prior to beginning finishing operations.

Maintain reinforcing in proper position during concrete placement operations.

Cold Weather Placing: Protect concrete work from physical damage or reduced strength which could be caused by frost, freezing actions, or low temperatures, in compliance with ACI 306 and as herein specified.

When air temperature has fallen to or is expected to fall below 40 degrees F uniformly heat water and aggregates before mixing to obtain a concrete mixture temperature of not less than 50 degrees F. and not more than 80 degrees F at point of placement.

Do not use frozen materials or materials containing ice or snow. Do not place concrete on frozen subgrade or on subgrade containing frozen materials.

Do not place concrete when air temperature has fallen to or is expected to fall below 35°F.

Do not use calcium chloride, salt and other materials containing antifreeze agents or chemical accelerators, unless otherwise accepted in mix designs.
Hot Weather Placing:

When hot weather conditions exist that would seriously impair quality and strength of concrete, place concrete in compliance with ACE 305 and as herein specified.

Cool ingredients before mixing to maintain concrete temperature at time of placement below 90 degrees F. Mixing water may be chilled, or chopped ice may be used to control temperature provided water equivalent of ice is calculated to total amount of mixing water. Use of liquid nitrogen to cool concrete is Contractor's option.

Cover reinforcing steel with water-soaked burlap if it becomes too hot, so that steel temperature will not exceed the ambient air temperature immediately before embedment in concrete.

Fog spray forms, reinforcing steel and subgrade just before concrete is placed.

Use water-reducing retarding admixture (Type D) when required by high temperatures, low humidity, or other adverse placing conditions.

FINISH OF FORMED SURFACES:

Rough Form Finish: For formed concrete surfaces not exposed-to-view in the finish work or by other construction, unless otherwise indicated. This is the concrete surface having texture imparted by form facing material used, with tie holes and defective areas repaired and patched and fins and other projections exceeding 1/4" in height rubbed down or chipped off.

Smooth Form Finish: For formed concrete surfaces or that are to be covered with a coating material applied directly to concrete, or a covering material applied directly to concrete such as waterproofing, dampproofing. This is as-cast concrete surface obtained with selected form facing material, arranged orderly and symmetrically with a minimum of seams. Repair and patch defective areas with fins or other projections completely removed and smoothed.

Smooth Rubbed Finish: For formed concrete surfaces exposed to view provide smooth rubbed finish, not later than one day after form removal.

Moisten concrete surfaces and rub with carborundum brick or other abrasive until a uniform color and texture is produced. Do not apply cement grout other than that created by the rubbing process.

Related Unformed Surfaces: At tops of walls, horizontal offsets, and similar unformed surfaces occurring adjacent to formed surfaces, strike-off smooth and finish with a texture matching adjacent formed surfaces. Continue final surface treatment of formed surfaces uniformly across adjacent unformed surfaces, unless otherwise indicated.

MONOLITHIC SLAB FINISHES:

Note: All interior concrete slab surfaces shall be laser screeded by the Contractor.

Finish surfaces to the following tolerances, measured within 24 hours according to ASTM E 1155/E 1155M for randomly trafficked floor surfaces:

1. Specified overall values of flatness, F(F) 40: and levelness, F(L) 30 for slabs on grade (see Polished Concrete Section).

Scratch Finish: Apply scratch finish to monolithic slab surfaces that are to receive concrete floor topping or mortar setting beds for tile, portland cement terrazzo and other bonded applied cementious finish flooring material, and as otherwise indicated.

Slope surface uniformly to drains where required. After leveling, roughen surfaces before final set, with stiff brushes, brooms or rakes.

Float Finish: Apply float finish to monolithic slab surfaces to receive trowel finish and other finishes as hereinafter specified, and slab surfaces which are to be covered with membrane or elastic waterproofing membrane or elastic roofing, or sand-bend terrazzo, and as otherwise indicated.

After screeding consolidating, and leveling concrete slabs, do not work surface until ready for floating. Begin floating when surface water has disappeared or when concrete has stiffened sufficiently to permit operation of power-driven floats, or both. Consolidate surface with power-driven floats or by hand-floating if area is small or inaccessible to power units. Cut down high spots and fill low spots. Uniformly slope surfaces to drains. Immediately after leveling, refloat surface to a uniform, smooth, granular texture.

Trowel Finish: Apply trowel finish to monolithic slab surfaces to be exposed-to-view and slab surfaces to be covered with resilient flooring, carpet, ceramic or quarry tile, paint or other thin film finish coating system.

After floating, begin first trowel finish operation using a power-driven trowel. Begin final troweling when surface produces a ringing sound as trowel is moved over surface. Consolidate concrete surface by final hand-troweling operation, free of trowel marks, uniform in texture and appearance. Grind smooth surface defects which would telegraph through applied floor covering system.

Non-Slip Broom Finish: Apply non-slip broom finish to exterior concrete platforms, steps and ramps and elsewhere as indicated.

Immediately after trowel finishing, slightly roughen concrete surface by brooming with fiber bristle broom perpendicular to main traffic route. Coordinate required final finish with Architect before application.

CONCRETE CURING AND PROTECTION:

General: Protect freshly placed concrete from premature drying and excessive cold or hot temperatures.

Start initial curing as soon as free water has disappeared from concrete surface after placing and finishing. Keep continuously moist for not less than 7 days.

Begin final curing procedures immediately following initial curing and before concrete has dried. Continue final curing for at least seven (7) days in accordance with ACI 301 procedures. Avoid rapid drying at end of final curing period.

Curing Methods: Perform curing of concrete by curing and sealing compound, by moist curing, by moisture-retaining cover curing, and by combinations thereof, as herein specified.

Provide moisture curing by one of the following methods or by a combination of the following methods:

1. Keep concrete surface continuously wet by covering with water.
2. Continuous water-fog spray.
3. Covering concrete surface with specified absorptive cover, thoroughly saturating cover with water and keeping continuously wet. Place absorptive cover to provide coverage of concrete surfaces and edges, with 4" lap over adjacent absorptive covers.

Provide moisture-cover curing as follows:

1. Cover concrete surfaces with moisture-retaining cover for curing concrete, placed in widest practicable width with sides and ends lapped at least 3" and sealed by waterproof tape or adhesive. Immediately repair any holes or tears during curing period using cover material and waterproof tape.

Provide curing and sealing compound to interior slabs with resilient flooring, carpet over cushion, or left exposed; and to exterior slabs, walks, and curbs as follows:

1. Apply specified curing and sealing compound to concrete slabs as soon as final finishing operations are complete (within two hours). Apply uniformly in continuous operation by power-spray or roller in accordance with manufacturer's directions. Recoat areas subjected to heavy rainfall within three (3) hours after initial application. Maintain continuity of coating and repair damage during curing period.

Do not use membrane curing compounds on surface which are to be covered with coating material applied directly to concrete, liquid floor hardener, waterproofing, dampproofing, membrane roofing, flooring (such as ceramic or quarry tile, glue-down carpet), painting and other coatings and finish materials, unless otherwise acceptable to Architect.

Curing Formed Surfaces: Cure formed concrete surfaces, by moist curing with forms in place for full curing period or until forms are removed. If forms are removed, continue curing by methods specified above, as applicable.

Curing Unformed Surfaces: Cure unformed surfaces, such as slabs, floor topping, and other flat surfaces by application of appropriate curing method.

Final cure concrete surfaces to receive liquid floor hardener or finish flooring by use of moisture-retaining cover, unless otherwise directed.

Sealer and Dustproofer: Apply a second coat of specified curing and sealing compound only to surfaces given a first coat.

REMOVAL OF FORMS:

Formwork not supporting weight of concrete, such as sides of walls, and similar parts of the work, may be removed after cumulatively curing at not less than 50 degrees F for twenty-four (24) hours after placing concrete, provided concrete is sufficiently hard to not be damaged by form removal operations, and provided cutting and protection operations are maintained.

Formwork supporting weight of concrete, may not be removed in less than fourteen (14) days and until concrete has attained design minimum compressive strength of in place concrete by testing field-cured specimens representative of concrete location in members.

Form facing material may be removed four (4) days after placement, only if shores and other vertical supports have been arranged to permit removal of form facing material without loosening or disturbing shores and supports.

RE-USE OF FORMS:

Clean and repair surfaces of forms to be re-used in work. Split, frayed, delaminated or otherwise damaged form facing material will not be acceptable for exposed surfaces. Apply new form coating compound as specified for new formwork.

When forms are extended for successive concrete placement, thoroughly clean surfaces, remove fins and laitance, and tighten forms to close joints. Align and secure joint to avoid offsets. Do not use "patched" forms for exposed concrete surfaces, except as acceptable to Architect.

MISCELLANEOUS CONCRETE ITEMS:

Filling-In: Fill-in holes and openings left in concrete structures for passage of work by other trades, unless otherwise shown or directed, after work of other trades is in place. Mix, place and cure concrete as herein specified, to blend with in-place construction.

Provide other miscellaneous concrete filling shown or required to complete work.

Curbs: Provide monolithic finish to interior curbs by stripping forms while concrete is still green and steel-troweling surfaces to a hard, dense finish with corners, intersections and terminations slightly rounded.

Equipment Bases and Foundations: Provide machine and equipment bases and foundations, as shown on drawings. Set anchor bolts for machines and equipment to template at correct elevations, complying with certified diagrams or templates of manufacturer furnishing machines and equipment.

Reinforced Masonry: Provide concrete grout for reinforced masonry, masonry lintels and bond beams where indicated on drawings and as scheduled. Maintain accurate location of reinforcing steel during concrete placement.

CONCRETE SURFACE REPAIRS:

Patching Defective Areas: Repair and patch defective areas with cement mortar immediately after removal of forms when acceptable to Architect.

Cut out honeycomb, rock pockets, voids over 1/4" in any dimension, and holes left by tie rods and bolts, down to solid concrete but, in no case to a depth of less than 1". Make edges of cuts perpendicular to the concrete surface. Thoroughly clean, dampen with water and brush-coat the area to be patched with specified bonding agent. Place patching mortar after bonding compound has dried.

For exposed to view surfaces, blend white portland cement and standard portland cement so that when dry, patching mortar will match color surrounding. Provide test areas at inconspicuous location to verify mixture and color match before proceeding with patching. Compact mortar in place and strike-off slightly higher than surrounding surface.

Repair of Formed Surfaces: Remove and replace concrete having defective surfaces if defects cannot be repaired to satisfaction of Architect. Surface defects, as such, include color and texture irregularities, cracks, spalls, air bubbles, honeycomb, rock pockets; fins and other projections on surface; and stains and other discolorations that cannot be removed by cleaning. Flush out form tie holes, fill with dry pack mortar, or precast cement cone plugs secured in place with bonding agent.

Repair concealed formed surfaces, where possible, that contain defects that affect the durability of concrete. If defects cannot be repaired, remove and replace concrete.
Repair of Unformed Surfaces: Test unformed surfaces, such as monolithic slabs, for smoothness and verify surface plane to tolerances specified for each surface and finish. Correct low and high areas as herein specified. Test unformed surfaces sloped to drain for trueness of slope, in addition to smoothness using a template having required slope.

Repair finished unformed surfaces that contain defects which affect durability of concrete. Surface defects, as such, include crazing, cracks in excess of 0.01" wide or which penetrate to reinforcement or completely through non-reinforced sections regardless of width, spalling, popouts, honeycomb, rock pockets and other objectionable conditions.

Correct high areas in unformed surfaces by grinding, after concrete has cured at least 14 days.

Correct low areas in unformed surfaces during, or immediately after, completion of surface finishing operations by cutting out low areas and replacing with fresh concrete. Finish repaired areas to blend into adjacent concrete. Proprietary patching compounds may be used when acceptable to Architect.

Repair defective areas, except random cracks and single holes not exceeding 1" diameter, by cutting out and replacing with fresh concrete. Remove defective areas to sound concrete with clean, square cuts and exposed reinforcing steel with at least 3/4" clearance all around.

Dampen concrete surfaces in contact with patching concrete and apply bonding compound. Mix patching concrete of same materials to provide concrete of same type or class as original concrete. Place, compact and finish to blend with adjacent finished concrete. Cure in same manner as adjacent concrete.

Repair isolated random cracks and single holes not over 1" in diameter by dry-pack method. Groove top of cracks and cut-out holes to sound concrete and clean of dust, dirt and loose particles. Dampen cleaned concrete surfaces and apply bonding compound. Mix dry-pack, consisting of one part portland cement to 2-1/2 parts fine aggregate passing a No. 16 mesh sieve, using only enough water as required for handling and placing.

Place dry pack after bonding compound has dried. Compact dry-pack mixture in place and finish to match adjacent concrete. Keep patched area continuously moist for not less than seventy-two (72) hours.

Perform structural repairs with prior approval of Architect for method and procedure, using specified epoxy adhesive and mortar.

Repair methods not specified above may be used, subject to acceptance of Architect.

QUALITY CONTROL TESTING DURING CONSTRUCTION:

The **Owner** will employ and pay for a testing laboratory to perform tests and to submit test reports. The Contractor shall notify testing agency 24 hours in advance of requirements.

Sampling and testing for quality control during placement of concrete may include the following, as directed by Architect.

The Owner shall maintain equipment on site to cast cylinders, perform slump and air tests, and field cure specimens. Should the project testing agency be absent from the site, the Contractor will be responsible for performing the field tests below.

Sampling Fresh Concrete: ASTM C 172, except as modified for slump to comply with ASTM C 94.

1. Slump: ASTM C 143; one test at point of discharge for each day's pour of each type of concrete; additional tests when concrete consistency seems to have changed.
2. Concrete Temperature: Test hourly when air temperature is 40 degrees F. and below, and when 80 degrees F. and above; and each time a set of compression test specimens made.
3. Compression Test Specimen: ASTM C 31; one set of four (4) standard cylinders for each compressive strength test, unless otherwise directed. Mold and store cylinders for laboratory cured test specimens except when field-cure test specimens are required.

Compressive Strength Tests: ASTM C 39; one set for each day's pour plus additional sets for each 50 cu. yds. over and above the first 25 cu. yds. of each concrete class placed in any one day; one specimen tested at seven (7) days, two specimen tested at twenty-eight (28) days, and one specimen retained in reserve for later testing if required. Minimum compressive strength of concrete shall be 3,000 psi at 28 days unless otherwise indicated.

When frequency of testing will provide less than five (5) strength tests for a given class of concrete, conduct testing from at least five (5) randomly selected batches or from each batch if fewer than five (5) are used.

When total quantity of a given class of concrete is less than 50 cu. yds., strength test may be waived by Architect if, in his judgment, adequate evidence of satisfactory strength is provided.

When strength of field-cured cylinders is less than 85% of companion laboratory-cured cylinders, evaluate current operations and provide corrective procedures for protecting and curing the in-place concrete.

Test results shall be reported in writing to Architect and Contractor within twenty-four (24) hours that tests are made. Reports of compressive strength tests shall contain the project identification name and number, date of concrete placement, name of concrete testing service, concrete type and class, location of concrete batch in structure, design compressive strength at twenty-eight (28) days, concrete mix proportions and materials;

compressive breaking strength and type of break for both 7-day tests and 28-day tests.

Nondestructive Testing: Impact hammer, sonoscope, or other non- destructive device may be permitted but shall not be used as the sole basis for acceptance or rejection.

Additional Tests: The testing service will make additional tests of in-place concrete when test results indicate specified concrete strengths and other characteristics have not been attained in the structure, as directed by Architect. Testing service may conduct tests to determine adequacy of concrete by cored cylinders complying with ASTM C 42, or by other methods as directed.

Contractor shall pay for such tests conducted, and any other additional testing as may be required, when unacceptable concrete is verified.

END OF SECTION 03310

SECTION 04400 - CAST STONE

PART 1 – GENERAL

RELATED DOCUMENTS

Drawings and general provisions of Contract including General and Supplementary Conditions and Division 1 Specification sections apply to work of this section.

DESCRIPTION OF WORK

Extent of cast stone work is indicated on drawings.

Joint sealers are specified in Division 7.

Work Furnished but Installed by Others: Furnish inserts and reglets in time to be installed in concrete or masonry.

QUALITY ASSURANCE

Source Quality Control

Subcontract fabrication of stone to a firm which has successfully fabricated stone similar to the quality specified for a period of not less than 5 years and is equipped to provide the quantity shown.

SUBMITTALS

Product Data: Submit specifications and other data for each type of cast stone work required, including certification that each type complies with specified requirements. Include instructions for handling, storage, installation and protection of each type.

Samples: Submit sets of samples not less than 12” x 12” x 1” in size of each different color, grade and finish of cast stone work required. Include in each set full range of exposed color and texture to be expected in completed work.

Shop Drawings: Submit cutting and setting drawings showing sizes, dimensions, sections and profiles of cast stone units, arrangement and provisions for jointing, anchoring and fastening, supports and other necessary details for lifting devices and reception of other work. Indicate location of each cast stone unit on setting drawings with number designation corresponding to number marked on each unit.

Show location of inserts (for stone anchors and supports) which are to be built into concrete or masonry.

Show large scale details of decorative surfaces and inscriptions.

PRODUCT DELIVERY, STORAGE AND HANDLING

Protect cast stone during storage and construction against moisture, soiling, staining and physical damage.

Handle cast stone to prevent chipping, breakage, soiling or other damage. Do not use pinch or wrecking bars without protecting edges of stone with wood or other rigid materials. Lift with wide belt type slings wherever possible; do not use wire rope or ropes containing tar or other substances which might cause staining. If required, use wood rollers and provide cushion at end of wood slides.

Store cast stone on wood skids or pallets, covered with non-staining, waterproof membrane. Place and stack skids of cast stone to distribute weight evenly and to prevent breakage or cracking of cast stone. Protect stored cast stone from weather with waterproof, non-staining covers or enclosures, but allow air to circulate around cast stone.

Protect mortar materials and cast stone accessories from weather, moisture and contamination with earth and other foreign materials.

JOB CONDITIONS

Installer must review installation procedures and coordination with other work, with Contractor, and other contractors and subcontractors whose work will be affected by cast stone work.

During all seasons, protect partially completed cast stone work against weather when work is not in progress.

PART 2 – PRODUCTS

Furnish cast stone complying with ASTM C 39, and as follows:

1. Texture and Finishes: Texture of cast stone shall be sand type and color to be selected by the Architect. Submit sample for approval.
2. Fabrication: Cast stone shall be sufficiently reinforced to withstand conditions in the building, including handling and setting stresses.
3. Exposed faces shall be true and sharp.
4. Mark each precast item to correspond to identification mark on shop drawings.

5. Seal all cast stone at factory prior to shipment.
6. Mixes: The standard 6” x 12” cylinder strength of all precast concrete shall not be less than 5,000 psi at 28 days when tested in accordance with ASTM C 39.
7. Absorption shall not be less than 3% and not more than 7% when tested in accordance with ASTM C 97.
8. Minimum thickness of facing mix shall be 1½” thick. Backup concrete may be made with gray cement and aggregate conforming to requirements for cast in place concrete.

MORTAR AND GROUT

Cement: Provide white cement as follows:

1. Portland Cement: ASTM C150, except complying with the staining requirements of ASTM C 91 for not more than 0.03% water soluble alkali. Furnish Type I, except Type III may be used for setting cast stone in cold weather.
2. Masonry Cement: ASTM C 91, non-staining.

Hydrated Lime: ASTM C 207, Type S.

Sand: ASTM C 144, except graded with 100% passing the No. 16 sieve for ¼” and narrower joints.

Additive for Moisture Resistance: Ammonium stearate, aluminum tristearate or calcium stearate.

Water: Clean and potable.

CAST STONE ACCESSORIES

Adjustable Inserts: Malleable iron of type and size indicated, or if not indicated, as required to support loading involved.

Expansion Anchors: Type, size and load capacity shown, or if not shown, as required to support loading involved.

1. For anchoring into concrete, fabricate from cadmium plated or hot dipped galvanized steel.
2. For anchoring into stone, fabricate from AISI type 302/304 stainless steel.

Anchor Bolts, Nuts and Washers: Fabricate from AISI type 302/304 stainless steel if in contact with stone; otherwise provide regular low carbon steel bolts and nuts (ASTM A 307) hot dip galvanized, complying with ASTM A 153.

Cast Stone Anchors: Type and size indicated or, if not indicated, as required to securely anchor and fasten cast stone in place. Fabricate anchors and dowels from AISI type 302/304 stainless steel.

MIXES

Mortar: Non-staining, cement/lime mortar, complying with ASTM C 270, Proportion Specification, using specified materials.

1. Use Type N unless otherwise indicated.
2. Use specified mortar for grouting.
3. Use specified mortar for parging.

FABRICATION

General: Fabricate as shown and as detailed on final shop drawings and in compliance with recommendations of applicable cast stone association. Provide holes and sinkages cut or drilled for anchors, fasteners, supports and lifting devices, as shown and as necessary to secure cast stone in place. Cut and back-check as required for proper fit and clearance. Shape beds to fit supports.

Contiguous Work: Provide chases, reveals, reglets, openings and similar spaces and features as required for contiguous work. Coordinate with drawings and final shop drawings showing contiguous work.

Cast accurately to shape and dimensions shown on final shop drawings, maintaining fabrication tolerances of applicable cast stone associations.

1. Joint Width: Cast to provide joint widths as indicated, or if not indicated, cut to allow for uniform 3/8” wide joints.
2. Tape off all joints prior to application.

Thickness: Provide cast stone of thickness indicated.

1. Allow not less than 1” clearance between back face of units and structure framing (or fireproofing, if any).

PART 3 – EXECUTION

PREPARATION

Advise Installers of other work about specific requirements relating to his placement of inserts and flashing reglets which are to be used by stone mason for anchoring and supporting and flashing of cast stone. Furnish Installers of

other work with drawings or templates showing location of inserts for stone anchors and supports.

Clean cast stone before setting by thoroughly scrubbing with fiber brushes followed by a thorough drenching with clear water. Use only mild cleaning compounds that contain no caustic or harsh fillers or abrasives. If not thoroughly wet at time of setting, drench or sponge cast stone. Do not wet expansion or control joint surfaces.

INSTALLATION

Execute cast stone work by skilled mechanics.

Ferrous Metal: Where cast stone will contact ferrous metal surfaces which will be concealed in back-up construction (anchors, supports, structural framing and similar surfaces), apply a heavy coat of bituminous paint on metal surfaces prior to setting of stone. Do not extend coating onto portions of ferrous metal which will be exposed in finished work. Do not apply coating to stainless or non-ferrous metals.

Provide expansion joints where shown. Do not fill with mortar. Install continuous strips of preformed joint filler to allow for installation of backer rod and sealant, specified in Division 7.

Set cast stone in accordance with drawings and final shop drawings for stonework. Set cast stone plumb and accurately aligned with joints uniform in width. Provide anchors, supports, fasteners and other attachments shown or necessary to secure cast stone in place. Completely fill holes, slots and other sinkages for anchors, dowels, fasteners and supports with mortar during setting of cast stones.

Joints: Butter vertical joints for full width before setting and set units in full bed of mortar, unless otherwise indicated.

1. Point joints after setting by tooling to profile shown, or if not shown, tool slightly concave.

ADJUST AND CLEAN

Seal all cast stone after installation.

Remove and replace cast stone units which are broken, chipped, stained or otherwise damaged. Where directed, remove and replace units which do not match adjoining cast stone. Provide new matching units, install as specified and point-up joints to eliminate evidence of replacement. Repoint defective and unsatisfactory joints as required to provide a neat, uniform appearance.

Clean cast stone not less than six days after completion of work, using clean water and stiff-bristle brushes. Do not use wire brushes, acid type cleaning agents or other cleaning compounds with caustic or harsh fillers.

Provide final protection and maintain conditions in a manner acceptable to Fabricator and Installer, which ensures cast stone being without damage, discolorations or deterioration during subsequent construction and until time of substantial completion.

END OF SECTION 04400

SECTION 05120 - STRUCTURAL STEEL

PART 1 – GENERAL

RELATED DOCUMENTS:

Drawings and general provisions of the contract including General and Supplementary Conditions and Division 1 Specification Sections apply to work of this section.

DESCRIPTION OF WORK:

Extent of structural steel work is shown on drawings, including schedules, notes and details to show size and location of members, typical connections, and type of steel required.

Structural steel is that work defined in AISC "Code of Standard Practice" and as otherwise shown on drawings.

QUALITY ASSURANCE:

Codes and Standards: Comply with provisions of following, except as otherwise indicated.

1. AISC "Specifications for the Design, Fabrication, and Erection of Structural Steel for Buildings", including "Commentary" and Supplements thereto as issued.
2. AISC "Specifications for Structural Joints using ASTM A 325 or A 490 Bolts" approved by the Research Council on Riveted and Bolted Structural Joints of the Engineering Foundation.
3. AWS D1.1 "Structural Welding Code".
4. ASTM A 6 "General Requirements for Delivery of Rolled Steel Plates, Shapes, Sheet Piling and Bars for Structural Use.

Qualifications for Welding Work: Qualify welding processes and welding operators in accordance with AWS "Standard Qualification Procedure".

Provide certification that welders to be employed in work have satisfactorily passed AWS qualification tests.

1. If re-certification of welders is required, retesting will be Contractor's responsibility.

SUBMITTALS:

Product Data: Submit producer's or manufacturer's specifications and installation instructions for following products. Include laboratory test reports and other data to show compliance with specifications (including specified standards).

1. Structural steel including certified copies of mill reports covering chemical and physical properties.
2. High-strength bolts including nuts and washers.
3. Structural steel primer paint.
4. Shrinkage-resistant grout.

Shop Drawings: Submit shop drawings including complete details and schedules for fabrication and assembly of structural steel members procedures and diagrams. All shop and erection drawings shall be prepared under the direct supervision of a registered engineer and shall be sealed by said engineer.

Include details of cuts, connections, camber, holes, and other pertinent data. Indicate welds by standard AWS symbols, and show size, length, and type of each weld.

1. Provide setting drawings, templates, and directions for installation of anchor bolts and other anchorages to be installed by others.

DELIVERY, STORAGE AND HANDLING:

Deliver materials to site at such intervals to insure uninterrupted progress of work.

Deliver anchor bolts and anchorage devices, which are to be embedded in cast-in-place concrete or masonry, in ample time to not to delay work.

Store materials to permit easy access for inspection and identification. Keep steel members off ground, using pallets, platforms, or other supports. Protect steel members and packaged materials from erosion and deterioration.

Do not store materials on structure in a manner that might cause distortion or damage to members or supporting structures. Repair or replace damaged materials or structures as directed.

PART 2 – PRODUCTS

MATERIALS:

Metal Surfaces, General: For fabrication of work which will be exposed to view, use only materials which are smooth and free of surface blemishes including pitting, seam marks, roller marks, rolled trade names and roughness. Remove such blemishes by

grinding, or by welding and grinding, prior to cleaning, treating and application of surface finishes.

Miscellaneous Steel Shapes, Plates, Channels, Bars and other shapes: ASTM A 36.

Wide Flange and CWT Shapes: ASTM A992 Grade B, Fy=50 ksi

Cold-Formed Steel Tubing: ASTM A 500, Grade B, Fy=46.0 ksi

Steel Pipe: ASTM A 53, Type E or S, Grade B.

1. Finish: Black, except where indicated to be galvanized.

Anchor Bolts: ASTM A 307, nonheaded type unless otherwise indicated.

Provide hexagonal heads and nuts for all connections.

High-Strength Threaded Fasteners: Heavy hexagon structural bolts, heavy hexagon nuts, and hardened washers, as follows:

1. Quenched and tempered medium-carbon steel bolts, nuts and washers, complying with ASTM A 325.

Electrodes for Welding: Comply with AWS Code.

1. For high-strength low-alloy steel, provide electrodes, welding rods and filler metals equal in strength and compatible in appearance with parent metal joined.

Structural Steel Primer Paint: Manufacturer's standard (no lead).

Non-metallic Shrinkage-Resistant Grout: Pre-mixed, non-metallic, non-corrosive, non-staining product containing selected silica sands, portland cement, shrinkage compensating agents, plasticizing and water reducing agents, complying with CRD-C62l.

Manufacturers: The following manufacturers' products have been used to establish minimum standards for material, workmanship and function:

Dayton Superior 1107 Advantage
Euco N.S.; Euclid Chemical Co.
Crystex; L&M Construction Chemicals
Masterflow 7l3; Master Builders
Five Star Grout; U.S. Grout Corp.
Upcon; Upco Chem. Div., USM Corp.
Propak; Protex Industries, Inc.

Equal products of other manufacturers may be used in the work, provided such products have been approved by the Architect, not less than five (5) days prior to scheduled bid opening.

Manufacturer Single Source: Provide cementitious grout products from a single qualified manufacturer.

Cementitious Grout: Cementitious grout for high performance applications.

1. Product shall conform to:
   a) CRD C621, US Army Corps of Engineers Specification for Non-Shrink Grout
   b) ASTM C1107, Standard Specification for Packaged, Dry, Hydraulic-Cement Grout (non-shrink)
2. Basis of Design Product:
   a) "EUCO TREMIE GROUT" by The Euclid Chemical Company
   b) Compressive Strength, ASTM C109 Modified to ASTM C1107 S ection 11.5, 2 in. (5 cm) cubes:
      1) At 72° F (22° C)
         a) 1 day: 3200 psi (22MPa)
         b) 3 days: 4800 psi (33 MPa)
         c) 7 days: 5600 psi (38 MPa)
         d) 28 days: 7200 psi (49 MPa)
      2) At 50° F (10° C)
         a) 1 day: 1000 psi (7 MPa)
         b) 3 days: 3000 psi (20 MPa)
         c) 7 days: 3700 psi (25 MPa)
         d) 28 days: 4500 psi (31 MPa)
   c) Volume Change, ASTM C1090 and CRD C621:
      1) At 72° F (22° C)
         a) 3 days: 0.04%
         b) 7 days: 0.06%
         c) 14 days: 0.06%
         d) 28 days: 0.08%
   d) Setting time, ASTM C191:
      1) At 72° F (22° C)
         a) Initial set: 5 hours
         b) Final set: 7 hours
      2) At 50° F (10° C)
         a) Initial set: 12 hours
         b) Final set: 18 hours

FABRICATION:

Shop Fabrication and Assembly: Fabricate and assemble structural assemblies in shop to greatest extent possible. Fabricate items of structural steel in accordance with AISC Specifications and as indicated on final shop drawings.

Properly mark and match-mark materials for field assembly. Fabricate for delivery sequence which will expedite erection and minimize field handling of materials.

Where finishing is required, complete assembly, including welding of units, before start of finishing operations. Provide finish surfaces of members exposed in final structure free of markings, burrs, and other defects.

Connections: Weld or bolt shop connections, as indicated.

Bolt field connections, except where welded connections or other connections are indicated.

1. Provide high-strength threaded fasteners for principal bolted connections, except where unfinished bolts are indicated.

High-Strength Bolted Construction: Install high-strength threaded fasteners in accordance with AISC "Specifications for Structural Joints using ASTM A 325.

Welded Construction: Comply with AWS Code for procedures, appearance and quality of welds, and methods used in correcting welding work.

Assemble and weld built-up sections by methods which will produce true alignment of axes without warp.

Holes for Other Work: Provide holes required for securing other work to structural steel framing, and for passage of other work through steel framing members, as shown on final shop drawings.

Provide threaded nuts welded to framing, and other specialty items as indicated to receive other work.

Cut, drill, or punch holes perpendicular to metal surfaces. Do not flame cut holes or enlarge holes by burning. Drill holes in bearing plates.

SHOP PAINTING:

General: Shop paint structural steel, except those members or portions of members to be embedded in concrete or mortar. Paint embedded steel which is partially exposed on exposed portions and initial 2" of embedded areas only.

Do not paint surfaces which are to be welded.

Apply 2 coats of paint to surfaces which are inaccessible after assembly or erection. Change color of second coat to distinguish it from first.

Surface Preparation: After inspection and before shipping, clean steel work to be painted. Remove loose rust, loose mill scale, and spatter, slag or flux deposits. Clean steel in accordance with Steel Structures painting Council (SSPC) as follows:

1. SP-3 "Power Tool Cleaning".

Painting: Immediately after surface preparation, apply structural steel primer paint in accordance with manufacturer's instructions and at a rate to provide dry film thickness of not less than l.5 mils. Use painting methods which result in full coverage of joints, corners, edges and exposed surfaces.

PART 3 – EXECUTION

ERECTION:

Surveys:

Check elevations of concrete and masonry bearing surfaces, and locations of anchor bolts and similar devices, before erection work proceeds, and report discrepancies to Architect. Do not proceed with erection until corrections have been made, or until compensating adjustments to structural steel work have been agreed upon with Architect.

Temporary Shoring and Bracing: Provide temporary shoring and bracing members with connections of sufficient strength to bear imposed loads. Remove temporary members and connections when permanent members are in place and final connections are made. Provide temporary guy lines to achieve proper alignment of structures as erection proceeds.

Temporary Planking: Provide temporary planking and working platforms as necessary to effectively complete work.

Anchor Bolts: Furnish anchor bolts and other connectors required for securing structural steel to foundations and other in-place work.

Furnish templates and other devices as necessary for presetting bolts and other anchors to accurate locations.

Setting Bases and Bearing Plates: Clean concrete and masonry bearing surfaces of bond-reducing materials and roughen to improve bond to surfaces. Clean bottom surface of base and bearing plates.

Set loose and attached base plates and bearing plates for structural members on wedges or other adjusting devices.

Tighten anchor bolts after supported members have been positioned and plumbed. Do not remove wedges or shims, but if protruding, cut off flush with edge of base or bearing plate prior to packing with grout.

Pack grout solidly with non-metallic shrinkage resistant grout between bearing surfaces and bases or plates to ensure that no voids remain. Finish exposed surfaces, protect installed materials, and allow to cure.

Field Assembly: Set structural frames accurately to lines and elevations indicated. Align and adjust various members forming part of complete frame or structure before permanently fastening. Clean bearing surfaces and other surfaces which will be in permanent contact before assembly. Perform necessary adjustments to compensate for discrepancies in elevations and alignment.

Level and plumb individual members of structure within specified AISC tolerances.

Splice members only where indicated and accepted on shop drawings.

Comply with AISC Specifications for bearing, adequacy of temporary connections, alignment, and removal of paint on surfaces adjacent to field welds.

Do not enlarge unfair holes in members by burning or by use of drift pins, except in secondary bracing members. Ream holes that must be enlarged to admit bolts.

Gas Cutting: Do not use gas cutting torches in field for correcting fabrication errors in primary structural framing. Cutting will be permitted only on secondary members which are not under stress, as acceptable to Architect. Finish gas-cut sections equal to a sheared appearance when permitted.

Touch-Up Painting: Immediately after erection, clean field welds, bolted connections, and abraded areas of shop paint. Apply paint to exposed areas using same material as used for shop painting.

Apply by brush or spray to provide minimum dry film thickness of l.5 mils.

QUALITY CONTROL:

The **Owner** shall employ and pay an independent laboratory to conduct shop and field inspections and tests.

Correct deficiencies in structural steel work which inspections and laboratory test reports have indicated to be not in compliance with requirements. Perform additional tests, at Contractor's expense, as may be necessary to reconfirm any non-compliance of original work, and as may be necessary to show compliance of corrected work.

Shop Bolted Connections: Inspect in accordance with AISC specifications.

Shop Welding: Inspect and test during fabrication of structural steel assemblies, as follows:

1. Certify welders and conduct inspections and tests as required. Record types and locations of defects found in work. Record work required and performed to correct deficiencies.
2. Perform visual inspection of all welds.
3. Perform Ultrasonic or radiographic test on all groove welds.

Field Bolted Connections: Inspect in accordance with AISC specifications.

Field Welding: Inspect and test during erection of structural steel as follows:

1. Certify welders and conduct inspections and tests as required. Record types and locations of defects found in work. Record work required and performed to correct deficiencies.
2. Perform visual inspection of all welds. Perform Ultrasonic or radiographic test on all groove welds.

END OF SECTION 05120

SECTION 05210 - STEEL JOISTS

PART 1 – GENERAL

RELATED DOCUMENTS:

Drawings and general provisions of the contract including General and Supplementary Conditions and Division 1 Specification Sections apply to work of this section.

DESCRIPTION OF WORK:

Extent of steel joists is shown on drawings, including basic layout and type of joists required.

QUALITY ASSURANCE:

Provide joists fabricated in compliance with the following, and as herein specified.

SJI "Standard Specifications, Load Tables and Weight Tables" for:

1. K - Series Open Web Steel Joists.

Qualification of Field Welding: Qualify welding processes and welding operators in accordance with the AWS "Standard Qualification Procedure".

Joists welded in place are subject to inspection and testing. Expense of removing and replacing any portion of steel joists for testing purposes will be born by Owner if welds are found to be satisfactory. Remove and replace work found to be defective and provide new acceptable work.

SUBMITTALS:

Product Data: Submit manufacturer's specifications and installation instructions for each type of joist and accessories. Include manufacturer's certification that joists comply with SJI "Specifications".

Shop Drawings: Submit detailed drawings showing layout of joist units, special connections, jointing and accessories. Include mark, number, type, location and spacing of joists and bridging.

DELIVERY, STORAGE AND HANDLING:

Deliver, store and handle steel joists as recommended in SJI "Specifications". Handle and store joists in a manner to avoid deforming members and to avoid excessive stresses.

PART 2 – PRODUCTS

MATERIALS:

Steel: Comply with SJI "Specifications".

High-Strength Threaded Fasteners: ASTM A 325 or A 490 heavy hexagon structural bolts with nuts and hardened washers.

Steel Prime Paint: Manufacturer's standard.

FABRICATION:

General: Fabricate steel joists in accordance with SJI "Specification".

Holes in Chord Members: Provide holes in chord members where shown for securing other work to steel joists; however, deduct area of holes from the area of chord when calculating strength of member.

Extended Ends: Provide extended ends on joists where shown, complying with manufacturer's standards and requirements of applicable SJI "Specifications" and load tables.

Ceiling Extensions: Provide ceiling extensions in areas having ceilings attached directly to joist bottom chord. Provide either an extended bottom chord element or a separate unit, to suit manufacturer's standards, of sufficient strength to support ceiling construction. Extend ends to within 1/2" of finished wall surface unless otherwise indicated.

Bridging: Provide horizontal and cross bridging, complying with SJI "Specifications", and as shown on structural drawings.

Provide bridging anchors for ends of bridging lines terminating at walls or beams.

End Anchorage: Provide end anchorages to secure joists to adjacent construction, complying with SJI "Specifications", unless otherwise indicated.

Shop Painting: Remove loose scale, heavy rust, and other foreign materials from fabricated joists and accessories before application of shop paint.

Apply one shop coat of primer paint to steel joists and accessories, by spray, dipping, or other method to provide a continuous dry paint film thickness of not less than 0.50 mil.

PART 3 – EXECUTION

INSPECTION:

Erector shall examine areas and conditions under which steel joists are to be installed and notify Contractor in writing of conditions detrimental to proper and timely completion of work. Do not proceed with work until unsatisfactory conditions have been corrected in a manner acceptable to Erector.

ERECTION:

Place and secure steel joists in accordance with SJI "Specifications", final shop drawings, and as herein specified.

Anchors: Furnish weld plates and other devices to be built into concrete and masonry construction.

1. Refer to Division-3 sections for installation of anchors set in concrete.

Placing Joists: Do not start placement of steel joists until supporting work is in place and secured. Place joists on supporting work, adjust and align in accurate locations and spacing before permanently fastening.

Provide temporary bridging, connections, and anchors to ensure lateral stability during construction.

Bridging: Install bridging simultaneously with joist erection, before construction loads are applied. Anchor ends of bridging lines at top and bottom chords where terminating at walls or beams. Connect cross bridging at intersection of bridging members.

Fastening Joists:

Field weld joists to supporting steel framework in accordance with SJI "Specifications" for type of joists used. Coordinate welding sequence and procedure with placing of joists.

Touch-Up Painting: After joist installation, paint field bolt heads and nuts, and welded areas, abraded or rusty surfaces on joists and steel supporting members. Wire brush surfaces and clean with solvent before painting. Use same type of paint as used for shop painting.

END OF SECTION 05210

SECTION 05320 - STEEL ROOF DECKING

PART 1 – GENERAL

RELATED DOCUMENTS

Drawings and general provisions of the Contract including General and Supplementary Conditions and Division 1 Specification Sections apply to this Section.

SUMMARY

This Section includes the following:

1. Roof deck.

Related Sections include the following:

1. Division 5 Section "Structural Steel" for shop and field-welded shear connectors.

SUBMITTALS

Product Data: For each type of deck, accessory, and product indicated.

Shop Drawings: Show layout and types of deck panels, anchorage details, reinforcing channels, pans, cut deck openings, special jointing, accessories, and attachments to other construction.

Product Certificates: For each type of steel deck, signed by product manufacturer.

Welding certificates.

Field quality-control test and inspection reports.

Product Test Reports: Based on evaluation of comprehensive tests performed by a qualified testing agency, indicating that each of the following complies with requirements:

1. Power-actuated mechanical fasteners.

Research/Evaluation Reports: For steel deck.

QUALITY ASSURANCE

Testing Agency Qualifications: An independent agency qualified according to ASTM E 329 for testing indicated.

Welding: Qualify procedures and personnel according to AWS D1.3, "Structural Welding Code – Sheet Steel."

Fire-Test-Response Characteristics: Where indicated, provide steel deck units identical to those tested for fire resistance per ASTM E 119 by a testing and inspecting agency acceptable to authorities having jurisdiction.

1. Fire-Resistance Ratings: Indicated by design designations of applicable testing and inspecting agency.
2. Steel deck units shall be identified with appropriate markings of applicable testing and inspecting agency.

AISI Specifications: Comply with calculated structural characteristics of steel deck according to AISI's "North American Specification for the Design of Cold-Formed Steel Structural Members."

FMG Listing: Provide steel roof deck evaluated by FMG and listed in its "Approval Guide, Building Materials" for Class 1 fire rating and Class 1-90 windstorm ratings.

DELIVERY, STORAGE, AND HANDLING

Protect steel deck from corrosion, deformation, and other damage during delivery, storage, and handling.

Stack steel deck on platforms or pallets and slope to provide drainage. Protect with a waterproof covering and ventilate to avoid condensation.

1. Protect and ventilate acoustical cellular roof deck with factory installed insulation to maintain insulation free of moisture.

PART 2 – PRODUCTS

Manufacturers: The following manufacturers' products have been used to establish minimum standards for materials, workmanship and function:

Steel Deck:
Consolidated Systems, Inc.
Epic Metals Corporation.
Nucor Corp.; Vulcraft Division.

United Steel Deck, Inc.
Wheeling Corrugating Company; Div. of Wheeling-Pittsburgh Steel Corporation.

Equal products of other manufacturers may be used in the work provided such products have been approved by the Architect, not less than five (5) days prior to scheduled bid opening.

ROOF DECK

Steel Roof Deck: Fabricate panels, without top-flange stiffening grooves, to comply with "SDI Specifications and Commentary for Steel Roof Deck," in SDI Publication No. 30, and with the following:

1. Galvanized Steel Sheet: ASTM A653/A653M, Structural Steel (SS), Grade 33 (230), G60 (Z180) zinc coating."
2. Deck Profile: As indicated.
3. Profile Depth: As indicated.
4. Design Uncoated-Steel Thickness: As indicated
5. Span Condition: Triple span or more.
6. Side Laps: Overlapped.

ACCESSORIES

General: Provide manufacturer's standard accessory materials for deck that comply with requirements indicated.

Mechanical Fasteners: Corrosion-resistant, low-velocity, power-actuated or pneumatically driven carbon-steel fasteners; or self-drilling, self-threading screws.

Side-Lap Fasteners: Corrosion-resistant, hexagonal washer head; self-drilling, carbon-steel screws, No. 10 minimum diameter.

Flexible Closure Strips: Vulcanized, closed-cell, synthetic rubber.

Miscellaneous Sheet Metal Deck Accessories: Steel sheet, minimum yield strength of 33,000 psi, not less than 0.0359-inch design uncoated thickness, of same material and finish as deck; of profile indicated or required for application.

Pour Stops and Girder Fillers: Steel sheet, minimum yield strength of 33,000 psi, of same material and finish as deck, and of thickness and profile recommended by SDI Publication No. 30 for overhang and slab depth.

Column Closures, End Closures, Z-Closures, and Cover Plates: Steel sheet, of same material, finish, and thickness as deck, unless otherwise indicated.

Piercing Hanger Tabs: Piercing steel sheet hanger attachment devices for use with floor deck.

Weld Washers: Uncoated steel sheet, shaped to fit deck rib, 0.0598 inch thick, with factory-punched hole of 3/8-inch minimum diameter.

Galvanizing Repair Paint: SSPC-Paint 20 or DOD-P-21035, with dry film containing a minimum of 94 percent zinc dust by weight.

Repair Paint: Manufacturer's standard rust-inhibitive primer of same color as primer.

PART 3 – EXECUTION

EXAMINATION

Examine supporting frame and field conditions for compliance with requirements for installation tolerances and other conditions affecting performance.

INSTALLATION, GENERAL

Install deck panels and accessories according to applicable specifications and commentary in SDI Publication No. 30, manufacturer's written instructions, and requirements in this Section.

Install temporary shoring before placing deck panels, if required to meet deflection limitations.

Locate deck bundles to prevent overloading of supporting members.

Place deck panels on supporting frame and adjust to final position with ends accurately aligned and bearing on supporting frame before being permanently fastened. Do not stretch or contract side-lap interlocks.

Place deck panels flat and square and fasten to supporting frame without warp or deflection.

Cut and neatly fit deck panels and accessories around openings and other work projecting through or adjacent to deck.

Provide additional reinforcement and closure pieces at openings as required for strength, continuity of deck, and support of other work.

Comply with AWS requirements and procedures for manual shielded metal arc welding, appearance and quality of welds, and methods used for correcting welding work.

Mechanical fasteners may be used in lieu of welding to fasten deck. Locate mechanical fasteners and install according to deck manufacturer's written instructions.

ROOF-DECK INSTALLATION

Fasten roof-deck panels to steel supporting members by arc spot (puddle) welds of the surface diameter indicated or arc seam welds with an equal perimeter that is not less than 1-1/2 inches long, and as follows:

1. Weld Diameter: 5/8 inch nominal.
2. Weld Spacing: Weld edge and interior ribs of deck units with a minimum of two welds per deck unit at each support. Space welds 18 inches apart, maximum 12 inches apart in the field of roof and 6 inches apart in roof corners and perimeter, based on roof-area definitions in FMG Loss Prevention Data Sheet 1-28 as indicated.
3. Weld Washers: Install weld washers at each weld location.

Side-Lap and Perimeter Edge Fastening: Fasten side laps and perimeter edges of panels between supports, at intervals not exceeding the lesser of 1/2 of the span or 18 inches 36 inches, and as follows:

1. Mechanically fasten with self-drilling, No. 10 diameter or larger, carbon-steel screws.

End Bearing: Install deck ends over supporting frame with a minimum end bearing of 1-1/2 inches, with end joints as follows:

1. End Joints: Lapped 2 inches minimum

Roof Sump Pans and Sump Plates: Install over openings provided in roof deck and weld mechanically fasten flanges to top of deck. Space welds mechanical fasteners not more than 12 inches apart with at least one weld fastener at each corner.

1. Install reinforcing channels or zees in ribs to span between supports and weld or mechanically fasten.

Miscellaneous Roof-Deck Accessories: Install ridge and valley plates, finish strips, end closures, and reinforcing channels according to deck manufacturer's written instructions. Weld or mechanically fasten to substrate to provide a complete deck installation.

1. Weld cover plates at changes in direction of roof-deck panels, unless otherwise indicated.

Flexible Closure Strips: Install flexible closure strips over partitions, walls, and where indicated. Install with adhesive according to manufacturer's written instructions to ensure complete closure.

FIELD QUALITY CONTROL

Testing Agency: Owner will engage a qualified independent testing and inspecting agency to perform field tests and inspections and prepare test reports.

Field welds will be subject to inspection.

Testing agency will report inspection results promptly and in writing to Contractor and Architect.

Remove and replace work that does not comply with specified requirements.

Additional inspecting, at Contractor's expense, will be performed to determine compliance of corrected work with specified requirements.

REPAIRS AND PROTECTION

Repair Painting: Wire brush and clean rust spots, welds, and abraded areas on both surfaces of prime-painted deck immediately after installation, and apply repair paint.

1. Apply repair paint, of same color as adjacent shop-primed deck, to bottom surfaces of deck exposed to view.

Provide final protection and maintain conditions to ensure that steel deck is without damage or deterioration at time of Substantial Completion.

END OF SECTION 05310

SECTION 05500 - MISCELLANEOUS STEEL AND METAL FABRICATIONS

PART 1 – GENERAL

RELATED DOCUMENTS:

Drawings and general provisions of the contract including General and Supplementary Conditions and Division 1 Specification Sections apply to work of this section.

DESCRIPTION OF WORK:

Definition: Metal fabrications include items made from iron and steel shapes, plates bars, strips, tubes, pipes and castings which are not a part of structural steel or other metal systems specified elsewhere.

Extent of metal fabrications is indicated on drawings and schedules.

Types of work in this section include metal fabrications for:

1. Rough hardware.
2. Nosings.
3. Loose bearing and leveling plates.
4. Loose steel lintels.
5. Miscellaneous framing and supports.
6. Miscellaneous steel trim.
7. Shelf angles.
8. Steel railings.

SYSTEM PERFORMANCES:

Structural Performances: Provide assemblies which, when installed, comply with the following minimum requirements for structural performance, unless otherwise indicated.

1. Handrails and Toprails: Capable of withstanding the following loads applied as indicated when tested per ASTM E 935.
2. Concentrated Load: of 200lb applied at any point and any direction.
3. Uniform load of 50 lb per linear ft. applied in any direction.
4. Concentrated and uniform loads above need not be assumed to act concurrently.
5. Guards: Intermediate rails, balusters and panel fillers capable of withstanding a uniform load of 25 lb per sq. ft. of gross area of guard, including any open areas, of which they are a part.

QUALITY ASSURANCE:

Shop Assembly: Preassemble items in shop to greatest extent possible to minimize field splicing and assembly. Disassemble units only as necessary for shipping and handling limitations. Clearly mark units for reassembly and coordinated installation.

SUBMITTALS:

Product Data: Submit manufacturer's specifications, anchor details and installation instructions for products used in miscellaneous metal fabrications, including paint products and grout.

Shop Drawings: Submit shop drawings for fabrication and erection of metal fabrications. Include plans, elevations and details of sections and connections. Show anchorage and accessory items. Provide templates for anchor and bolt installation by others.

1. Where materials or fabrications are indicated to comply with certain requirements for design loadings, include structural computations, material properties and other information needed for structural analysis.

Samples: Submit 2 sets of representative samples of materials and finished products as may be requested by Architect.

PART 2 – PRODUCTS

MATERIALS:

Ferrous Metals:

Metal Surfaces, General: For fabrication of miscellaneous metal work which will be exposed to view, use only materials which are smooth and free of surface blemishes including pitting, seam marks, roller marks, rolled trade names and roughness.

Steel Structural, Shapes and Bars: ASTM A 36, wide flange, ASTM A572, fyz50ks.

Steel Tubing: Hot-rolled, ASTM A 500. FY=46KSI

Structural Steel Sheet: Hot-rolled, ASTM A 570; or cold-rolled ASTM A 611, Class 1; of grade required for design loading.

Galvanized Structural Steel Sheet: ASTM A 446, of grade required for design loading. Coating designation as indicated, or if not indicated, G90.

Steel Pipe: ASTM A 53; Type and grade (if applicable) as selected by fabricator and as required for design loading; black finish unless galvanizing is indicated; standard weight (schedule 40), unless otherwise indicated.

Gray Iron Castings: ASTM A 48, Class 30.

Malleable Iron Castings: ASTM A 47, grade as selected by fabricator.

Brackets, Flanges and Anchors: Cast or formed metal of the same type material and finish as supported rails, unless otherwise indicated.

Concrete Inserts: Threaded or wedge type; galvanized ferrous castings, either malleable iron, ASTM A 47, or cast steel, ASTM A 27. Provide bolts, washers and shims as required, hot-dip galvanized, ASTM A 153.

Non-Shrink Non-Metallic Grout: Pre-mixed, factory-packaged, non- staining, non-corrosive, non-gaseous grout complying with CE CRD-C621. Provide grout specifically recommended by manufacturer for interior and exterior applications of type specified in this section.

Fasteners:

General: Provide zinc-coated fasteners for exterior use or where built into exterior walls. Select fasteners for the type, grade and class required.

1. Bolts and Nuts: Regular hexagon head type, ASTM A 307, Grade A.
2. Lag Bolts: Square head type, FS FF-B-561.
3. Machine Screws: Cadmium plated steel, FS FF-S-92.
4. Wood Screws: Flat head carbon steel, FS FF-S-111.
5. Plain Washers: Round, carbon steel, FS FF-W-92.
6. Masonry Anchorage Devices: Expansion shields, FS FF-S-325.
7. Toggle Bolts: Tumble-wing type, FS FF-B-588, type, class and style as required.
8. Lock Washers: Helical spring type carbon steel, FS FF-W-84.

Paint:

Shop Primer for Ferrous Metal: Manufacturer's or Fabricator's standard, fast-curing, lead-free, "universal" primer; selected for good resistance to normal atmospheric corrosion, for compatibility with finish paint systems indicated and for capability to provide a sound foundation for field-applied topcoats despite prolonged exposure; complying with performance requirements of FS TT-P-645.

Galvanizing Repair Paint: High zinc dust content paint for regalvanizing welds in galvanized steel, complying with the Military Specifications MIL-P-21035 (Ships) or SSPC-Paint-20.

Concrete Fill:

Concrete Materials and Properties: Comply with requirements of Division-3 section "Concrete Work" for normal weight, ready-mix concrete with minimum 28-day compressive strength of 3000 psi, and W/C ratio of 0.58 maximum, unless higher strengths indicated.

Non-Slip Aggregate Finish: Factory-graded, packaged material containing fused aluminum oxide grits or crushed emery as abrasive aggregate; rust-proof and non-glazing; unaffected by freezing, moisture or cleaning materials.

FABRICATION, GENERAL:

Workmanship: Use materials of size and thickness indicated, or if not indicated, as required to produce strength and durability in finished product for use intended. Work to dimensions indicated or accepted on shop drawings, using proven details of fabrication and support. Use type of materials indicated or specified for various components of work.

Form exposed work true to line and level with accurate angles and surfaces and straight sharp edges. Ease exposed edges to a radius of approximately 1/32" unless otherwise indicated. Form bent-metal corners to smallest radius possible without causing grain separation or otherwise impairing work.

Weld corners and seams continuously, complying with AWS recommendations. At exposed connections, grind exposed welds smooth and flush to match and blend with adjoining surfaces.

Form exposed connections with hairline joints, flush and smooth, using concealed fasteners wherever possible. Use exposed fasteners of type indicated or, if not indicated, Phillips flat-head (countersunk) screws or bolts.

Provide for anchorage of type indicated, coordinated with supporting structure. Fabricate and space anchoring devices to provide adequate support for intended use.

Cut, reinforce, drill and tap miscellaneous metal work as indicated to receive finish hardware and similar items.

Galvanizing: Provide a zinc coating for those items indicated or specified to be galvanized, as follows:

1. ASTM A 153 for galvanizing iron and steel hardware.
2. ASTM A 123 for galvanizing rolled, pressed and forged steel shapes, plates, bars and strip 1/8" thick and heavier.
3. ASTM A 386 for galvanizing assembled steel products.

Fabricate joints which will be exposed to weather in a manner to exclude water or provide weep holes where water may accumulate.

Shop Painting:

Apply shop primer to surfaces of metal fabrications except those which are galvanized or as indicated to be embedded in concrete or masonry, unless otherwise indicated, and in compliance with requirements of SSPC-PA1 "Paint Application Specification No. 1" for shop painting.

1. Stripe paint all edges, corners, crevices, bolts, welds and sharp edges.

Surface Preparation: Prepare ferrous metal surfaces to comply with minimum requirements indicated below for SSPC surface preparation specifications and environmental exposure conditions of installed metal fabrications:

1. Exteriors (SSPC Zone 1B): SSPC-SP6 "Commercial Blast cleaning".
2. Interior (SSPC Zone 1A): SSPC-SP3 "Power Tool Cleaning".

ROUGH HARDWARE:

Furnish bent or otherwise custom fabricated bolts, plates, anchors, hangers, dowels and other miscellaneous steel and iron shapes as required for framing and supporting woodwork, and for anchoring or securing woodwork to concrete or other structures. Straight bolts and other stock rough hardware items are specified in Division-6 sections.

Fabricate items to sizes, shapes and dimensions required. Furnish malleable-iron washers for heads and nuts which bear on wood structural connections; elsewhere, furnish steel washers.

LOOSE STEEL LINTELS:

Provide loose structural steel lintels for openings and recesses in masonry walls and partitions as shown and scheduled. Weld adjoining members together to form a single unit where indicated. Provide not less than 8" bearing at each side of openings, unless otherwise indicated. All steel lintels shall be hot-dipped galvanized steel.

MISCELLANEOUS FRAMING AND SUPPORTS:

Provide miscellaneous steel framing and supports which are not a part of structural steel framework, as required to complete work.

Fabricate miscellaneous units to sizes, shapes and profiles indicated or, if not indicated, of required dimensions to receive adjacent other work to be retained by framing. Except as otherwise indicated, fabricate from structural steel shapes, plates and steel bars of welded construction using mitered joints for field connection. Cut, drill and tap units to receive hardware and similar items.

Equip units with integrally welded anchors for casting into concrete or building into masonry. Furnish inserts if units must be installed after concrete is placed.

1. Except as otherwise indicated, space anchors 24" o.c. and provide minimum anchor units of 1-1/4" x 1/4" x 8" steel straps.

STEEL RAILINGS AND HANDRAILS:

Fabricate steel railings and handrails to design, dimensions, and details indicated. Provide railings and handrails members formed of steel tubing of shapes, sizes and wall thickness indicated, but not less than that required to support design loading.

Interconnect railing and handrail members by butt-welding or welding with internal connectors, at fabricator's option, unless otherwise indicated.

1. At tee and cross intersections provide coped joints.
2. At bends interconnect tubing by means of prefabricated elbow fittings or flush radius bends, as applicable, or radiuses indicated.
3. At elbow bends provide mitered joints.
4. Form bends by use of prefabricated elbow fittings and radius bends or by bending pipe, at fabricator's option.

Form simple and compound curves by bending tubing in jigs to produce uniform curvature for each repetitive configuration required; maintain cylindrical cross-section of pipe throughout entire bend without buckling, twisting or otherwise deforming exposed surfaces of pipe.

Provide wall returns at ends of wall-mounted handrails, except where otherwise indicated.

Close exposed ends of pipe by welding 3/16" thick steel plate in place or by use of prefabricated fittings.

Toe Boards: Where indicated, provide toeboards at railings around openings and at the edge of open-sided floors and platforms. Fabricate to dimensions and details indicated, or if not indicated, use a 4" high x 1/8" plate welded to, and centered between, each railing post.

Brackets, Flanges, Fittings and Anchors: Provide wall brackets, end closures, flanges, miscellaneous fittings and anchors for interconnections of pipe and attachment of railings and handrails to other work. Furnish inserts and other anchorage devices for connecting railings and handrails to concrete or masonry work.

1. For railing posts sets in concrete provide sleeves of galvanized steel pipe not less than 6" long and with an inside diameter not less than 1/2" greater than the outside dimensions of tubing. Provide steel plate closure welded to bottom of sleeve and of width and length not less than 1" greater than outside diameter of sleeve.

Stair Railings and Handrails: Comply with applicable requirements specified elsewhere in this section for steel railings and handrails, and as follows:

1. Railings may be bent at corners, rail returns and wall returns, instead of using prefabricated fittings.
2. Connect railing posts to stair framing by direct welding, unless otherwise indicated.

PART 3 – EXECUTION

PREPARATION:

Field Measurements: Take field measurements prior to preparation of shop drawings and fabrication, where possible. Do not delay job progress; allow for trimming and fitting where taking field measurements before fabrication might delay work.

Coordinate and furnish anchorages, setting drawings, diagrams, templates, instructions, and directions for installation of anchorages, such as concrete inserts, sleeves, anchor bolts and miscellaneous items having integral anchors, which are to be embedded in concrete or masonry construction. Coordinate delivery of such items to project site.

INSTALLATION:

General:

Fastening to In-Place Construction: Provide anchorage devices and fasteners where necessary for securing miscellaneous metal fabrications to in-place construction; including, threaded fasteners for concrete and masonry inserts, toggle bolts, through-bolts, lag bolts, wood screws and other connectors as required.

Cutting, Fitting and Placement: Perform cutting, drilling and fitting required for installation of miscellaneous metal fabrications. Set work accurately in location, alignment and elevation, plus, level, true and free of rack, measured from established lines and levels. Provide temporary bracing or anchors in formwork for items which are to be built into concrete masonry or similar construction.

Fit exposed connections accurately together to form tight hairline joints. Weld connections which are not to be left as exposed joints, but cannot be shop welded because of shipping size limitations. Grind exposed joints smooth and touch-up shop paint coat. Do not weld, cut or abrade the surfaces of exterior units which have been hot-dip galvanized after fabrication, and are intended for bolted or screwed field connections.

Field Welding: Comply with AWS Code for procedures of manual shielded metal-arc welding, appearance and quality of welds made, and methods used in correcting welding work.

Setting Loose Plates: Clean concrete and masonry bearing surfaces of any bond-reducing materials, and roughen to improve bond to surfaces. Clean bottom surface of bearing plates.

Set loose leveling and bearing plates on wedges, or other adjustable devices. After the bearing members have been positioned and plumbed, tighten the anchor bolts. Do not remove wedges or shims, but if protruding, cut-off flush with the edge of the bearing plate before packing with grout. Use metallic non-shrink grout in concealed locations where not exposed to moisture; use non-metallic non-shrink grout in exposed locations, unless otherwise indicated.

Steel Railings and Handrails:

Adjust railing prior to anchoring to ensure matching alignment at abutting joints. Space posts at spacing indicated, or if not indicated, as required by design loadings. Plumb posts in each direction. Secure posts and railing ends to building construction as follows:

1. Anchor posts in concrete by means of sleeves preset and anchored into concrete. After posts have been inserted into sleeves, fill annular space between post and sleeve solid with non-shrink, non-metallic grout, mixed and placed to comply with grout manufacturer's directions.
2. Leave anchorage joint exposed; wipe off excess grout and level 1/8" build-up, sloped away from post. For installation exposed on exterior or to flow of water, seal grout to comply with grout manufacturer's directions.

Secure handrails to wall with wall brackets and end fittings. Provide bracket with not less than 1-1/2" clearance from inside face of handrail and finished wall surface. Locate brackets as indicated, or if not indicated, at spacing required for design loading. Secure wall brackets and wall return fittings to building construction as follows:

1. Use type of bracket with pre-drilled hole for exposed bolt anchorage.
2. For concrete and solid masonry anchorage, use drilled-in expansion shield and either concealed hanger bolt or exposed lag bolt, as applicable.
3. For hollow masonry anchorage, use toggle bolts having square heads.
4. For stud partitions use lag bolts set into wood backing between studs. Coordinate with stud installations for accurate location of backing members.

Expansion Joints: Provide expansion joints at locations indicated, or if not indicated, at intervals not to exceed 40 feet. Provide slip joint with internal sleeve extending 2" beyond joint on either side; fasten internal sleeve securely to one side; locate joint within 6" of posts.

Cast Treads and Thresholds: Install cast treads and thresholds with anchorage system indicated to comply with manufacturer's recommendations. Seal units exposed to exterior mastic to provide a watertight installation.

ADJUST AND CLEAN:

Touch-Up Painting: Immediately after erection, clean field welds, bolted connections, and abraded areas of shop paint, and paint exposed areas with same material as used for shop painting.

Apply by brush or spray to provide a minimum dry film thickness of 2.0 mils.

For galvanized surfaces: Clean field welds, bolted connections and abraded areas and apply galvanizing repair paint to comply with ASTM A 780.

END OF SECTION 05500

SECTION 05540 - METAL STUDS

PART 1 – GENERAL

RELATED DOCUMENTS:

Drawings and general provisions of the contract including General and Supplementary Conditions and Division 1 Specification Sections apply to work of this section.

DESCRIPTION OF WORK:

Types of work include:

1. Light-gage metal support system for installation of gypsum and other materials.

QUALITY ASSURANCE:

Fire-Resistance Ratings: Where gypsum drywall systems with fire- resistance ratings are indicated, provide materials and installations which are identical with those of applicable assemblies tested per ASTM E 119 by fire testing laboratories acceptable to authorities having jurisdiction.

1. Provide fire-resistance rated assemblies identical to those indicated by reference to GA File No.'s. in GA "Fire Resistance Design Manual" or to design designations in UL "Fire Resistance Directory" or in listing of other testing and agencies acceptable to authorities having jurisdiction.

SUBMITTALS:

Product Data: Submit manufacturer's product specifications and installation instructions, including other data as may be required to show compliance with these specifications.

DELIVERY, STORAGE AND HANDLING:

Deliver materials in original packages, containers or bundles bearing brand name and identification of manufacturer or supplier.

Store material inside under cover and in manner to keep them dry, protected from weather, direct sunlight, surface contamination, corrosion and damage from construction traffic and other causes. Neatly stack gypsum boards flat to prevent sagging.

PART 2 – PRODUCTS

Manufacturers: The following manufacturers' products have been used to establish minimum standards for materials, workmanship and function:

Alabama Metal Industries Corp.
Bostick Steel Framing Co.
Ceco Corp.
Dale Industries, Inc.
Marinoware, Inc.

Equal products of other manufacturers may be used in the work, provided such products have been approved by the Architect not less than five (5) days prior to scheduled bid opening.

METAL FRAMING:

General:

Fabrication: Fabricate metal framing components of commercial quality steel sheet with a minimum yield paint of 33,000 psi; ASTM A446, A570 or A611.

Finish: Provide galvanized finish to metal framing components complying with ASTM A525 for minimum G60 coating.

"C"-Shape Studs and Resilient Channels:

Provide as follows:

1. Manufacturer's standard 22 gauge at all interior gypsum board locations, size to be as noted on the drawings.
2. Gauge at all exterior locations to be 18 gauge at exterior walls or as noted on the Structural Drawings, size to be as noted on the drawings.
3. Resilient hat channels, 18 gauge, size as noted on the drawings.

"C"H-Shape Studs: Provide manufacturer's standard 20 gauge unless otherwise noted on the Structural Drawings, size to be as noted on the drawings.

Fastenings: Attach components by welding, bolting, or screw fastenings, as standard with manufacturers.

INSTALLATION:

Manufacturer's Instructions: Install metal framing systems in accordance with manufacturer's printed or written instructions and recommendations, unless otherwise indicated.

Runner Tracks: Install continuous tracks sized to match studs. Align tracks accurately to layout at base and tops of studs. Secure tracks as recommended by stud manufacturer for type of construction involved, except do not exceed 24" o.c. spacing for nail or power-driven fasteners, or 16" o.c. for other types of attachment. Provide fasteners at corners and ends of tracks.

Set studs plumb, except as needed for diagonal bracing or required for non-plumb walls or warped surfaces and similar requirements.

Where stud system abuts structural columns or walls, including masonry walls, anchor ends of stiffeners to supporting structure.

Install supplementary framing, blocking and bracing in metal framing system wherever walls or partitions are indicated to support fixtures, equipment, services, casework, heavy trim and furnishings, and similar work requiring attachment to the wall or partition. Where type of supplementary support is not otherwise indicated, comply with stud manufacturer's recommendations and industry standards in each case, considering weight or loading resulting from item supported.

Installation of Wall Stud System: Secure studs to top and bottom runner tracks by either welding or screw fastening at both inside and outside flanges.

Frame wall openings larger than 2'-0" square with double stud at each jamb of frame except where more than 2 are either shown or indicated in manufacturer's instructions. Install runner tracks and jack studs above and below wall openings. Anchor tracks to jamb studs with stud shoes or by welding, and space jack studs same as full-height studs of wall. Secure stud system wall opening frame in manner indicated.

Frame both sides of expansion and control joints, with separate studs; do not bridge the joint with components of stud system.

PART 3 – EXECUTION

Space framing member 24" o.c., unless noted otherwise on the drawings or by UL Classification.

Install auxiliary framing at termination of drywall work, and at openings for light fixtures and similar work, as required for support of both the drywall construction and other work indicated for support thereon.

Supplementary Supports:

Install supplementary framing, blocking and bracing at terminations in the work and for support of fixtures, equipment services, heavy trim, grab bars, toilet accessories, furnishings, and similar work to comply with details indicated or if not otherwise indicated, to comply with applicable published recommendations of gypsum board manufacturer, or if not available, of "Gypsum Construction Handbook" published by United States Gypsum Co.

Isolate stud system from transfer of structural loading to system, both horizontally and vertically. Provide slip or cushioned type joints to attain lateral support and avoid axial loading.

Extend supplementary supports to the structural support system.

Frame openings to comply with details indicated or if not otherwise indicated, to comply with applicable published recommendations of gypsum board manufacturer, or if not available, of "Gypsum Construction Handbook" published by United States Gypsum Co. Attach vertical studs at jambs directly to frames; install runner track section (for jack studs) at head and secure to jamb studs.

Erect thermal insulation vertically. Until gypsum board is installed hold insulation in place with 18-gage tie wire or by an equally acceptable method.

END OF SECTION 05540

SECTION 06100 - ROUGH CARPENTRY

PART 1 - GENERAL

RELATED DOCUMENTS:

Drawings and general provisions of Contract including General and Supplementary Conditions and Division 1 Specification sections apply to work of this section.

WORK INCLUDED:

All wood, nails, bolts, screws, framing anchors and other rough hardware, and all other items needed for rough and finished carpentry in this work but not specifically described in other sections of these specifications.

QUALITY ASSURANCE:

Standards: In addition to complying with all pertinent codes and regulations, all materials of this section shall comply with pertinent provisions of:

Southern Pine	Southern Pine Inspection Bureau
Plywood	“Softwood Plywood - Construction and Industrial” (Amended June l969), Product Standard PD 1-66 of U.S. Department of Commerce, Bureau of Standards, and A.P.A.
Rough Hardware	“Specification for the Design, Fabrication and Erection of Structural Steel for Buildings of the American Institute of Steel Construction”
Building Paper	Federal Specification UU-B-790a, dated February 5, l968
Wood Preservative	Standard P-5 of the American Wood Preservers Institute
Other	Similar and pertinent reference standards for the products needed.

Conflicting Requirements: In the event of conflict between pertinent codes and regulations and the requirements of the referenced standards or these specifications, the provisions of the more stringent shall govern.

Qualifications of Workmen: Provide sufficient skilled workmen and supervisors who shall be present at all times during execution of this portion of the work and who shall be thoroughly familiar with the type of construction involved and the materials and techniques specified.

Rejection: In the acceptance or rejection of rough carpentry, no allowance will be made for lack of skill on the part of workmen.

PRODUCT HANDLING

Protection:

1. Store all materials in such a manner as to ensure proper ventilation and drainage and to protect against damage and the weather.
2. Use all means necessary to protect lumber materials before, during and after delivery to the job site, and to protect the installed work and materials of all other trades.
3. Deliver the materials to the job site and store all in a safe area, out of the way of traffic, and shored up off the ground surface.
4. Protect all metal products with adequate weather-proof outer wrappings.
5. Use extreme care in the off-loading of lumber to prevent damage, splitting and breaking of materials.
6. Keep all material clearly identified with all grade marks legible; keep all damaged material clearly identified as damaged, and separately stored to prevent its inadvertent use.
7. Do not allow installation of damaged or otherwise non-complying material.
8. Use all means necessary to protect the installed work and materials of all other trades.

Replacements: In the event of damage, immediately make all repairs and replacements necessary to the approval of the Architect and at no additional cost to the Owner.

PART 2 - MATERIALS

Grade Stamps:

Framing Lumber: Identify all framing lumber by proper grade stamp.

Plywood: Identify all plywood as to species, grade and glue type by the stamp of the American Plywood Association.

Other: Identify all other materials of this section by the appropriate stamp of the agency listed in the reference standards, or by such other means as are approved in advance by the Architect.

Moisture Content: Moisture content of any material for framing not to exceed 19% for boards 8” in width or less. Boards exceeding 8” in width not to exceed 15% at time of installation. All material used for finish and trim work to be kiln dried material with moisture content not to exceed that allowed by FHA for intended use.

MATERIALS

All materials of this Section, unless specifically otherwise approved in advance by the Architect, shall meet or exceed the following:

ITEM:	DESCRIPTION:
Plates, Grounds or Furring in Contact w/ concrete masonry or plaster	Pressure treated #2 KD Southern Yellow Pine
Gypsum Sheathing	5/8” exterior grade fiberglass faced treated core) gypsum sheathing, equal to Georgia Pacific Dens-Glass Gold. Install Dens Deck Prime Roof Board at interior of parapet walls.
Plywood Roof Decking	5/8” - 4’ x 8’ CDX Grade with exterior glue, install with plyclips.
Vapor Barrier	The General Contractor can furnish and install TAMKO® TW Moisture Wrap, flexible, 40-mil, self-adhering over all **exterior wall sheathing** or can elect to seal all joints of the exterior wall sheathing with a spray application of a 10 mil cold fluid applied elastomeric waterproofing equal to Senergy Senershield R and then an application of a commercial building wrap equal to DuPont "Commercial" wrap over the entire exterior wall sheathing.
Wood Preservative	Ammonical copper arsenite or 5% solution of pentachlorophenol
Steel Hardware	ASTM A-7 or A-36 (Use galvanized at exterior locations)
Machine Bolts	ASTM A-307
Lag Bolts	Federal Specifications FF-B-561

Nails	Common (Except as noted) Federal Specifications FF-N-1-1 (Use galvanized at exterior locations)
Flashing	Nervastral Seal Prof HD-20 except where metal is indicated. Nervastral Seal Prof HD shall be installed on all sills and heads ½" inward from outside face of wall and extended 6" on each side of opening brick veneer construction. The sheeting shall not be allowed to hang free prior to completion of brick work but shall be secured to the siding with nails and discs or furring strips.

Other Materials: All other materials, not specifically described but required for a complete and proper installation as indicated on the drawings, shall be new, suitable for the intended use, and subject to the approval of the Architect.

PART 3 - EXECUTION

Stockpiling: Stockpile all materials sufficiently in advance of need to ensure their availability in a timely manner for this work.

Delivery Schedules: Make as many trips to the job site as are necessary to deliver all materials of this section is a timely manner to ensure orderly progress of the total work.

Compliance: Do not permit materials not complying with the provisions of this section of these specifications to be brought onto or to be stored at the job site; immediately remove from the job site all non-complying materials and replace them with materials meeting the requirements of this section.

Surface Conditions

Inspection: Prior to all work of this section, carefully inspect the installed work of all other trades and verify that all such work is complete to the point where this installation may properly commence. Verify that rough carpentry may be performed in strict accordance with the original design and all pertinent codes and regulations.

Discrepancies:

1. In the event of discrepancy, immediately notify the Architect.
2. Do not proceed with installation in areas of discrepancy until all such discrepancies have been fully resolved.

Workmanship: All rough carpentry shall produce joints true, tight, and well nailed with all members assembled in accordance with the drawings and with all pertinent codes and regulations.

Selection of Lumber Pieces: Carefully select all members; select individual pieces so that knots and obvious defects will not interfere with placing bolts or proper nailing or making proper connections.

Cut out and discard all defects which render a piece unable to serve its intended functions; lumber may be rejected by the Architect, whether or not it has been installed, for excessive warp, twist, bow, crook, mildew, fungus, or mold, as well as for improper cutting and fitting.

Shimming: Do not shim sills, joists, short studs, trimmers, headers, lintels, or other framing components.

Treated Lumber: Use only treated lumber for all wood blocks and nailing grounds, etc. (other than foundation grade redwood) in, or in contact with, concrete.

Treatment: Treat all wood less than two feet above finished grade by spraying with the preservative specified in this section of these specifications, to a minimum distance of six inches from the ends, or otherwise treat as approved in advance by the Architect.

Perform all treatment in strict accordance with published recommendations of the manufacturer of the treatment preservative.

General Framing:

1. In addition to all framing operations normal to the fabrication and erection indicated on the drawings, install all backing required for the work of other trades.
2. Set all horizontal or sloped members with crown up.
3. Do not notch, bore, or cut members for pipes ducts conduits, or other seasons except as shown on the drawings or as specifically approved in advance by the Architect.

Bearing: Make all bearings full unless otherwise indicated on the drawings. Finish all bearing surfaces on which structural members are to rest so as to give sure and even support; where framing members slope, cut or notch the ends as required to give uniform bearing surface.

Blocking: Install all blocking required to support all items of finish and to cut off all concealed draft openings, both vertical and horizontal, between ceiling and floor areas.

All other locations where openings could afford passage for rodents or flames.

Nailing:

1. Use only common wire nails or spikes except where otherwise specifically noted in the drawings.
2. Provide penetration into the piece receiving the point of not less than 1/2 the length of the nail or spike provided, however, that 16 d nails may be used to connect two pieces of the two inch (nominal) thickness.
3. Do all nailing without splitting wood, preboring as required; replace all split members.

Bolting:

1. Drill holes 1/16 inch larger in diameter than the bolts being used; drill straight and true from one side only.
2. Bolt threads must not bear on wood; use washers under head and nut where both bear on wood; use washers under all nuts.

Screws:

1. For lag screws and wood screws, prebore holes same diameter as root of thread; enlarge holes to shank diameter for length of shank.
2. Screw, do not drive, all lag screws and wood screws.

Installation of Building Paper: Install the specified building paper over all exterior framing members where indicated to be installed, lapping all joints to prevent penetration of water into the stud spaces, and securely fastening the paper in place in accordance with the manufacturer's published recommendations.

Cleaning Up: Keep the premises in a neat, safe and orderly condition at all times during execution of this portion of the work, free from accumulation of sawdust, cut-ends, and debris.

END OF SECTION 06100

SECTION 06192 – METAL PLATE CONNECTED WOOD TRUSSES

PART 1 - GENERAL

RELATED DOCUMENTS: Drawings and general provisions of Contract including General and Supplementary Conditions and Division 1 Specification sections apply to work of this section.

SUMMARY

This Section includes the following:

1. Roof trusses.
2. Truss accessories.

Related Sections: The following Sections contain requirements that relate to this Section:

1. Division 5 Section "Metal Fabrications" for rough hardware anchoring trusses to concrete or masonry structures.
2. Division 6 Section "Rough Carpentry" for roof and floor sheathing of structural-use panels and dimension lumber for supplementary framing and permanent bracing.

DEFINITIONS

Metal-plate-connected wood trusses include planar structural units consisting of metal-plate-connected members fabricated from dimension lumber and cut and assembled before delivery to Project site.

PERFORMANCE REQUIREMENTS

Structural Performance: Engineer, fabricate, and erect metal-plate-connected wood trusses to withstand design loads within limits and under conditions required.

1. Design Loads: As indicated.
2. The truss manufacture shall design the trusses for the sprinkler piping load and to provide adequate support at the connection points.

Engineering Responsibility: Engage a fabricator who uses a qualified professional engineer to prepare calculations, Shop Drawings, and other structural data for metal-plate-connected wood trusses.

SUBMITTALS

General: Submit each item in this Article according to the Conditions of the Contract and Division 1 Specification Sections.

Product Data for lumber, metal-plate connectors, metal framing connectors, bolts, and fasteners.

Shop Drawings detailing location, pitch, span, camber, configuration, and spacing for each type of truss required; species, sizes, and stress grades of lumber to be used; splice details; type, size, material, finish, design values, and orientation and location of metal connector plates; and bearing details.

1. To the extent truss design considerations are indicated as fabricator's responsibility, include structural analysis data signed and sealed by the qualified professional engineer responsible for their preparation.
2. Include truss Shop Drawings signed and sealed by the qualified professional engineer responsible for their preparation.

Product certificates signed by officer of truss fabricating firm certifying that metal-plate-connected wood trusses supplied for Project comply with specified requirements and Shop Drawings.

Qualification data for firms and persons specified in "Quality Assurance" Article to demonstrate their capabilities and experience. Include lists of completed projects with project names and addresses, names and addresses of architects and owners, and other information specified.

Material test reports from a qualified independent testing agency indicating and interpreting test results relative to compliance of fire-retardant-treated wood products with requirements indicated.

Material certificates for dimension lumber specified to comply with minimum allowable unit stresses. Indicate species and grade selected for each use and design values approved by the American Lumber Standards Committee
(ALSC) Board of Review.

QUALITY ASSURANCE

Installer Qualifications: Engage an experienced Installer who has completed wood truss installation similar in material, design, and extent to that indicated for this Project and with a record of successful in-service performance.

Fabricator's Qualifications: Engage a firm that complies with the following requirements for quality control and is experienced in fabricating metal-plate-connected wood trusses similar to those indicated for this Project and with a record of successful in-service performance:

Fabricator participates in a recognized quality-assurance program that involves inspection by SPIB; Timber Products Inspection, Inc.; Truss Plate Institute (TPI); or other independent inspecting and testing agency acceptable to Architect and authorities having jurisdiction.

Comply with applicable requirements and recommendations of the following publications:

1. ANSI/TP1 1, "National Design Standard for Metal-Plate-Connected Wood Truss Construction."
2. TPI HIB "Commentary and Recommendations for Handling Installing & Bracing Metal Plate Connected Wood Trusses."
3. TPI DSB "Recommended Design Specification for Temporary Bracing of Metal Plate Connected Wood Trusses."

Metal-Plate Connector Manufacturer's Qualifications: A manufacturer that is a member of TPI and that complies with TPI quality-control procedures for manufacture of connector plates published in ANSI/TPI 1.

Single-Source Responsibility for Connector Plates: Provide metal connector plates from one source and by a single manufacturer.

Wood Structural Design Standard: Comply with applicable requirements of AFPA's "National Design Specification for Wood Construction" and its "Supplement."

Single-Source Engineering Responsibility: Provide trusses engineered by metal-plate connector manufacturer to support superimposed dead and live loads indicated, with design approved and certified by a qualified professional engineer.

Professional Engineer Qualifications: A professional engineer who is legally authorized to practice in the jurisdiction where Project is located and who is experienced in providing engineering services of the kind indicated that have resulted in installing metal-plate-connected wood trusses similar to those indicated for this Project and with a record of successful in-service performance.

NOTE: AT THE COMPLETION OF TRUSS ERECTION THE CONTRACTOR SHALL PROVIDE A TRUSS INSPECTION OF THE INSTALLED TRUSSES AND PERMANENT BRACING BY AN ENGINEER REGISTERED IN THE STATE OF ALABAMA. THE ENGINEER'S REPORT SHALL CERTIFY THE TRUSSES ARE CORRECTLY INSTALLED, USING SPECIFIED WOOD GRADE, AND CONFIGURED TO MEET THE DESIGN OF THE SUPPLIER. HIS SIGNED SEAL SHALL BE AFFIXED TO THE REPORT AND SUBMITTED TO THE ARCHITECT AND ENGINEER OF RECORD.

DELIVERY, STORAGE, AND HANDLING

Handle and store trusses with care and comply with manufacturer's written instructions and TPI recommendations to avoid damage and lateral bending.

Inspect trusses showing discoloration, corrosion, or other evidence of deterioration. Discard and replace trusses that are damaged or defective.

SEQUENCING AND SCHEDULING

Time delivery and erection of trusses to avoid extended on-site storage and to avoid delaying progress of other trades whose work must follow erection of trusses.

PART 2 - PRODUCTS

MANUFACTURERS

Available Manufacturers: Subject to compliance with requirements, manufacturers offering products that may be incorporated into the Work include, but are not limited to, the following:

1. Metal Connector Plates:
    a. Alpine Engineered Products, Inc.
    b. Computrus, Inc.
    c. Mitek Industries, Inc.
    d. Robbins Manufacturing Company.
    e. Tee-Lok Corporation.
    f. Truswal Systems Corporation.
2. Metal Framing Anchors:
    a. Cleveland Steel Specialty Co.
    b. Harlen Metal Products, Inc.
    c. Silver Metal Products, Inc.
    d. Simpson Strong-Tie Company, Inc.
    e. Southeastern Metals Manufacturing Co., Inc.
    f. United Steel Products Co.

DIMENSION LUMBER

Lumber Standards: Comply with DOC PS 20, "American Softwood Lumber Standard," and with applicable grading rules of inspection agencies certified by ALSC's Board of Review.

Inspection Agencies: Inspection agencies, and the abbreviations used to reference them, include the following:

1. SPIB - Southern Pine Inspection Bureau.

Grade Stamps: Provide lumber with each piece factory marked with grade stamp of inspection agency evidencing compliance with grading rule requirements and identifying grading agency, grade, species, moisture content at time of surfacing, and mill.
Provide dressed lumber, S4S, manufactured to actual sizes required by DOC PS 20 for moisture content specified, to comply with requirements indicated below:

1. Provide dry lumber with 19 percent maximum moisture content at time of dressing.

Grade and Species: Provide visually graded dimension lumber for truss chord and web members, of the following grade and species:

1. Grade for Chord Members: No. 2.
2. Grade for Web Members: No. 2.
3. Species: Southern pine graded per SPIB rules.

METAL CONNECTOR PLATES

General: Fabricate connector plates from metal complying with requirements indicated below.

Hot-Dip Galvanized Steel Sheet: Structural-quality steel sheet, zinc coated by hot-dip process complying with ASTM A 653, G60 coating designation; Grade 33 and not less than 0.0359 inch thick.

Electrolytic Zinc-Coated Steel Sheet: ASTM A 591, structural-(physical) quality steel sheet, zinc coated by electrodeposition; 33,000-psi minimum yield strength, coating class C, and not less than 0.0474 inch thick.

FASTENERS

General: Provide fasteners of size and type indicated that comply with requirements specified below for material and manufacture.

1. Where truss members are exposed to weather or to high relative humidities, provide fasteners with a hot-dip zinc coating per ASTM A 153 or of stainless steel, Type 304 or 316.

Nails, Wire, Brads and Staples: FS FF-N-105.

Power-Driven Fasteners: CABO NER-272.

Wood Screws: ASME B18.6.1.

Lag Bolts and Screws: ASME B18.2.1.

Bolts: Steel bolts complying with ASTM A 307, Grade A; with ASTM A 563 hex nuts and, where indicated, flat washers.

METAL FRAMING ANCHORS

General: Provide metal framing anchors of structural capacity, type, size, metal, and finish indicated that comply with requirements specified, including the following:

Research or Evaluation Reports: Provide products for which model code research or evaluation reports exist that are acceptable to authorities having jurisdiction and that evidence compliance of metal framing anchors for application indicated with building code in effect for this Project.

1. Allowable Design Loads: Provide products with allowable design loads, as published by manufacturer that meet or exceed those indicated. Manufacturer's published values shall be determined from empirical data or by rational engineering analysis, and demonstrated by comprehensive testing performed by a qualified independent testing agency.

Galvanized Steel Sheet: Hot-dip, zinc-coated steel sheet complying with ASTM A 653, G60 coating designation; structural, commercial, or lock-forming quality, as standard with manufacturer for type of anchor
indicated.

Stainless-Steel Sheet: ASTM A 666, Type 304 or 316, chromium nickel steel sheet; 33,000-psi minimum yield strength.

MISCELLANEOUS MATERIALS

Galvanizing Repair Paint: SSPC-Paint 20 or DOD-P-21035, with dry film containing a minimum of 94 percent zinc dust by weight.

FABRICATION

Cut truss members to accurate lengths, angles, and sizes to produce close-fitting joints.

Fabricate metal connector plates to size, configuration, thickness, and anchorage details required to withstand design loadings for types of joint designs indicated.

Assemble truss members in design configuration indicated using jigs or other means to ensure uniformity and accuracy of assembly with joints closely fitted to comply with tolerances of ANSI/TPI 1. Position members to produce design camber indicated.

1. Fabricate wood trusses within manufacturing tolerances of ANSI/TPI 1.

Connect truss members by metal connector plates located and securely embedded simultaneously into both sides of wood members by air or hydraulic press.

PART 3 - EXECUTION

INSTALLATION

Do not install wood trusses until supporting construction is in place and is braced and secured.

Before installing, splice trusses delivered to Project site in more than one piece.

Hoist trusses in place by lifting equipment suited to sizes and types of trusses required, exercising care not to damage truss members or joints by out-of-plane bending or other causes.

Install and brace trusses according to recommendations of TPI and as indicated.

Install trusses plumb, square, and true to line and securely fasten to supporting construction.

Space, adjust, and align trusses in location before permanently fastening and as follows:

1. Truss Spacing: As indicated.

Anchor trusses securely at all bearing points using metal framing anchors. Install fasteners through each fastener hole in metal framing anchor according to manufacturer's fastening schedules and written instructions.

Securely connect each truss ply required for forming built-up girder trusses.

1. Anchor trusses to girder trusses as indicated.

Install and fasten permanent bracing during truss erection and before construction loads are applied. Anchor ends of permanent bracing where terminating at walls or beams.

1. Install and fasten strongback bracing vertically against vertical web of parallel-chord floor trusses at centers indicated.

Install wood trusses within installation tolerances of ANSI/TPI 1.

Do not cut or remove truss members.

Return wood trusses that are damaged or do not meet requirements to fabricator and replace with trusses that do meet requirements.

1. Do not alter trusses in the field.

REPAIRS AND PROTECTION

Repair damaged galvanized coatings on exposed surfaces with galvanized repair paint according to ASTM A 780 and manufacturer's written instructions.

END OF SECTION 06192

SECTION 06200 - FINISH CARPENTRY

PART 1 - GENERAL

RELATED DOCUMENTS:

Drawings and general provisions of Contract including General and Supplementary Conditions and Division 1 Specification sections apply to work of this section.

DESCRIPTION OF WORK

Definition: Finish carpentry includes carpentry work which is exposed to view, is non-structural, and which is not specified as part of other sections. Types of finish carpentry work in this section include:

1. Interior running and standing trim.
2. Window Sills.

PRODUCT DELIVERY, STORAGE AND HANDLING:

Protect finish carpentry materials during transit, delivery, storage and handling to prevent damage, soiling and deterioration.

Do not deliver finish carpentry materials, until operations which could damage, soil or deteriorate woodwork have been completed in installation areas. If, due to unforeseen circumstances, finish carpentry materials must be stored in other than installation areas, store only in areas meeting requirements specified for installation areas.

PART 2 - PRODUCTS

MATERIALS:

General:

Nominal sizes are indicated, except as shown by detailed dimensions. Provide dressed or worked and dressed lumber, as applicable, manufactured to the actual sizes as required by PS 20 or to actual sizes and pattern as shown, unless otherwise indicated.

Moisture Content of Softwood Lumber: Provide kiln-dried (KD) lumber having a moisture content from time of manufacture until time of installation not greater than values required by the applicable grading rules of the respective grading and inspecting agency for the species and product indicated.

Interior Finish Carpentry:

Standing and Running Trim for Painted Finish: "B" and better fir or poplar, sizes and shapes as indicated on plans. Ceiling Trim "Randall Brothers" profile RB-273.

Standing and Running Trim for Stained Finish: "A" grade oak, sizes and shapes as indicated on plans. Base Trim "Randall Brothers" profile RB-713.

Miscellaneous Materials:

Window Sills shall be as follows:

1. Homogeneous solid sheets of filled plastic resin complying with material and performance requirements in ANSI Z124.3, for Type 5 or 6, without a pre-coated finish, ½" inch thick, color as selected by the Architect. As manufactured by one of the following, Corian, Avonite, Surell, Fountainhead, Swanstone or Gibraltar. Adhere with adhesive as required by manufacture.

Fasteners and Anchorages: Provide nails, screws and other anchoring devices of the proper type, size, material and finish for application indicated to provide secure attachment, concealed where possible, and complying with applicable Federal Specifications.

1. Where finish carpentry is exposed on exterior or in areas of high relative humidity, provide fasteners and anchorages with a hot-dipped zinc coating (ASTM A 153).

Inspect each piece of lumber and plywood or each unit of finish carpentry after drying; do not use twisted, warped, bowed or otherwise damaged or defective wood.

PART 3 - EXECUTION

PREPARATION:

Condition wood materials to average prevailing humidity conditions in installation areas prior to installing.

Backprime lumber for finish exposed on the exterior or, to moisture and high relative humidities on the interior. Comply with requirements of section on painting within Division 9 for primers and their application.

INSTALLATION:

Discard units of material which are unsound, warped, bowed, twisted, improperly treated, not adequately seasoned or too small to fabricate work with minimum of joints or optimum jointing arrangements, or which are of defective manufacturer with respect to surfaces, sizes or patterns.

Install the work plumb, level, true and straight with no distortions. Shim as required using concealed shims. Install to a tolerance of 1/8" in 8'-0" for plumb and level countertops; and with 1/16" maximum offset in flush adjoining and 1/8" maximum offsets in revealed adjoining surfaces.

Scribe and cut work to fit adjoining work, and refinish cut surfaces or repair damaged finish at cuts.

Standing and Running Trim: Install with minimum number of joints possible, using full-length pieces (from maximum length of lumber available) to the greatest extent possible. Stagger joints in adjacent and related members. Cope at returns, miter at corners, to produce tight fitting joints with full surface contact throughout length of joint. Use scarf joints for end-to-end joints.

Anchor finish carpentry work to anchorage devices or blocking built-in or directly attached to substrates. Secure to grounds, stripping and blocking with countersunk, concealed fasteners and blind nailing as required for a complete installation. Except where prefinished matching fasteners heads are required, use fine finishing nail for exposed nailings, countersunk and filled flush with finished surface, and matching final finish where transparent is indicated.

ADJUSTMENT, CLEANING, FINISHING AND PROTECTION:

Repair damaged and defective finish carpentry work wherever possible to eliminate defects functionally and visually; where not possible to repair properly, replace woodwork. Adjust joinery for uniform appearance.

Clean finish carpentry work on exposed and semi-exposed surfaces. Touch-up shop-applied finishes to restore damaged or soiled areas.

Refer to Division 9 sections for final finishing of installed finish carpentry work.

Protection: Installer of finish carpentry work shall advise Contractor of final protection and maintained conditions necessary to ensure that work will be without damage or deterioration at time of acceptance.

END OF SECTION 06200

SECTION 06220 - MILLWORK

PART 1 - GENERAL

RELATED DOCUMENTS:

Drawings and general provisions of Contract including General and Supplementary Conditions and Division 1 Specification sections apply to work of this section.

DESCRIPTION OF WORK:

Extent of each type of millwork is shown on drawings and in schedules.

Types of millwork include the following:

1. Counters
2. Cabinets
3. Solid Surface Countertops

REFERENCES:

AWI Quality Standard: Comply with applicable requirements of "Architectural Woodwork Quality Standards" published by the Architectural Woodwork Institute (AWI), except as otherwise indicated.

Shop Drawings: Submit shop drawings showing location of each item, dimensioned plans and elevations, large scale details, attachment devices and other components. Submit shop drawings for the following:

1. Counters
2. Cabinets
3. Solid Surface Countertops

PRODUCT DELIVERY, STORAGE AND HANDLING:

Protect millwork during transit, delivery, storage and handling to prevent damage, soiling and deterioration.

Do not deliver millwork, until wet work, grinding and similar operations which could damage, soil or deteriorate woodwork have been completed in installation areas. If, due to unforeseen circumstances, woodwork must be stored in other than installation areas, store only in areas meeting requirements specified for installation areas.

JOB CONDITIONS:

Conditioning: Installer shall advise Contractor of temperature and humidity requirements for woodwork installation areas. Do not install millwork until required temperature and relative humidity have been stabilized and will be maintained in installation areas.

Maintain temperature and humidity in installation area as required to maintain moisture content of installed woodwork within a 1.0 percent tolerance of optimum moisture content, from date of installation through remainder of construction period. The fabricator of woodwork shall determine optimum moisture content and required temperature and humidity conditions.

PART 2 - PRODUCTS

BASIC MATERIALS AND FABRICATION METHODS:

Wood Moisture Content: Provide kiln-dried (KD) lumber with an average moisture content range and 6% to 11% for interior work. Maintain temperature and relative humidity during fabrication, storage and finishing operations so that moisture content values for millwork at time of installation do not exceed:

1. Interior Wood Finish: 4%-9% for dry regions (as defined by AWI).
2. Interior Wood Finish: 5%-10% for mild regions (as defined by AWI).
3. Interior Wood Finish: 8%-13% for damp regions (as defined by AWI).

Plastic Laminate: Comply with NEMA LD-3 for type, thickness, color, pattern and finish indicated for each application, or if not indicated, as selected by Architect from manufacturer's standard products. WilsonArt is the specified laminate.

Quality Standards: For following types of architectural millwork; comply with indicated standards as applicable:

1. Countertops: AWI Section 400.
2. Miscellaneous Work: AWI Section 700.

Design and Construction Features: Comply with details shown for profile and construction of architectural woodwork; and, where not otherwise shown, comply with applicable Quality Standards, with alternate details as Fabricator's option.

Pre-Cut Openings: Fabricate architectural woodwork with pre-cut openings, where possible, to receive hardware, appliances, plumbing fixtures, electrical work and similar items. Locate openings accurately and use templates or roughing-in diagrams for proper size and shape. Smooth edges of cutoffs and, where located in countertops and similar exposures seal edges of cutouts with a water-resistant coating.

Measurements: Before proceeding with fabrication of woodwork required to be fitted to other construction, obtain measurements and verify dimensions and shop drawing details as required for accurate fit.

1. Where sequence of measuring substrates before fabrication would delay the project, proceed with fabrication (without field measurements) and provide ample borders and edges to allow for subsequent scribing and trimming of woodwork for accurate fit.

INTERIOR MILLWORK:

COUNTERS, BASE CABINETS AND SHELVING

General: Counters and cabinets shall be provided as indicated on plans with counters and base cabinets of essentially the same construction. Counters and cabinets shall be provided with wood blocks and braces glued and stapled in place as necessary to assure sturdy rigid construction. All visible wood to be stain grade A-B grade Oak plywood and oak solids. Plywood shall be book matched and all grain is to run as indicated on plans. All grain is to run the same direction.

Face Frame (Cabinets): Cabinets shall be constructed with front frame members of sound kiln dried A-B grade oak plywood suitable for stain finish and of 3/4" nominal thickness. Face nailing shall not be permitted. End rails of face frame shall be dadoed to receive end panels.

End Panels: Counter and cabinet end panels and shelves shall be 3/4" thick A-B grade plywood. All ends shall be machined to permit the shelves, back bottom and top to be let into the cabinet end.

Backs: Backs of cabinets shall be 1/2" plywood attached to minimum size 3/4" x 3-1/2" solid wood hanging rails which shall be mortised to receive back and bottom. Where exposed, backs of cabinets shall be 3/4" hardwood plywood.

Doors: Cabinet shall be overlaid 3/4" thick, A-B and grade oak plywood with applied oak veneer horizontal strips – see drawings for elevation of front of cabinets. All other frames to match.

Base Cabinet Bottoms: Bottoms of base cabinets 3/4" thick, B-C grade plywood let into end and backs.

Hardware:

1. Hinges: Concealed Stanley 331, 332 or 335
2. Magnetic Door Catches: Stanley K & V or equal
3. Pulls: 96mm by Amerock, black bronze finish.

Edges: At all doors install 1/2” wide hardwood edge.

Adjustable Shelf Standards and Supports:

No. 255 and 2465 Kanpe and Vogt or approved equal.

Provide dust panels of 1/4” thick plywood or tempered hardboard above compartments except where located directly below countertops.

COUNTERTOPS:

General: Provide materials which have been selected for surface flatness and smoothness. Exposed surfaces which exhibit pitting, seam marks, roller marks, stains, discolorations, telegraphing of core material, or other imperfections on finished units are not acceptable.

Adhesives or fasteners to be provided for securing of tops to cabinet work. Such materials to allow for contraction or expansion of tops where necessary.

Tops shall be equal to “Cambria 3CM, solid surface – Hollinsbrook” finish, rimrock edge profile.

PART 3 - EXECUTION

INSTALLATION:

Install the work plumb, level, true and straight with no distortions. Shim as required using concealed shims. Install to a tolerance of l/8” in 8’-0” for plumb and level (including countertops); and with l/l6” maximum offset in flush adjoining surface, l/8” maximum offsets in revealed adjoining surfaces.

Scribe and cut work to fit adjoining work, and refinish cut surfaces or repair damaged finish at cuts.

Anchor woodwork to anchors or blocking built-in or directly attached to substrates. Secure to grounds, stripping and blocking with countersunk, concealed fasteners and blind nailings required for a complete installation. Except where prefinished matching fasteners heads are required, use fine finishing nails for exposed nailing, countersunk and filled flush with woodwork, and matching final finish where transparent finishes indicated.

Millwork: Install without distortion so that doors will fit openings properly and be accurately aligned. Adjust hardware to center doors in openings and to provide unencumbered operation. Complete the installation of hardware and accessory items as indicated. Maintain veneer sequence matching (if any) of casework with transparent finish.

Countertops: Anchor securely to base units and other support systems as indicated.

Wood Storage Shelving: Complete the assembly of units and install in the areas indicated, including hardware and accessories as indicated.

ADJUSTMENT, CLEANING, FINISHING AND PROTECTION:

Repair damaged and defective woodwork wherever possible to eliminate defects functionally and visually; where not possible to repair properly, replace woodwork. Adjust joinery for uniform appearance.

Clean hardware, lubricate and make final adjustments for proper operation.

Clean woodwork on exposed and semi-exposed surfaces. Touch-up shop-applied finishes to restore damaged or soiled areas.

Complete the finishing work specified as work of this section, to whatever extent not completed at shop or prior to installation of woodwork.

Refer to the Division-9 sections for final finishing of installed millwork.

Protection: Installer of millwork shall advise Contractor of procedures required to protect millwork during remainder of construction period to ensure that work will be without damage or deterioration at time of acceptance.

END OF SECTION 06220

SECTION 07115 – BITUMINOUS DAMPPROOFING

PART 1 – GENERAL

RELATED DOCUMENTS:

Drawings and general provisions of the contract including General and Supplementary Conditions and Division 1 Specification Sections apply to work of this section.

SUMMARY

This Section includes cold-applied, emulsified-asphalt dampproofing applied to the following surfaces:

1. Exterior face of inner wythe of exterior masonry cavity walls.

SUBMITTALS

Product Data: For each type of product indicated. Include recommendations for method of application, primer, number of coats, coverage or thickness, and protection course.

Material Certificates: For each product, signed by manufacturers.

QUALITY ASSURANCE

Source Limitations: Obtain primary dampproofing materials and primers through one source from a single manufacturer. Provide secondary materials recommended by manufacturer of primary materials.

PROJECT CONDITIONS

Weather Limitations: Proceed with installation only when existing and forecasted weather conditions permit asphalt dampproofing to be performed according to manufacturers' written instructions.

PART 2 – PRODUCTS

Available Manufacturers: Subject to compliance with requirements, manufacturers offering products that may be incorporated into the Work include, but are not limited to, the following:

Cold-Applied, Emulsified-Asphalt Dampproofing:
Euclid Chemical Company (The)
Gardner Asphalt Corporation

Henry Corporation
Koppers Industries, Inc.
Malarkey Roofing Company
Meadows, W. R., Inc.
Sonneborn, Div. Of ChemRex, Inc.
Tamms Industries

BITUMINOUS DAMPPROOFING

Fibered Brush and Spray Coats: ASTM D 1227, Type II, Class I.

MISCELLANEOUS MATERIALS

Emulsified-Asphalt Primer: ASTM D 1227, Type III, Class I, except diluted with water as recommended by manufacturer.

PART 3 – EXECUTION

EXAMINATION

Examine substrates, with Applicator present, for compliance with requirements for surface smoothness and other conditions affecting performance of work.

1. Begin dampproofing application only after substrate construction and penetrating work have been completed and unsatisfactory conditions have been corrected.

PREPARATION

Protection of Other Work: Mask or otherwise protect adjoining exposed surfaces from being stained, spotted, or coated with dampproofing. Prevent dampproofing materials from entering and clogging weep holes and drains.

Clean substrates of projections and substances detrimental to work; fill voids, seal joints, and apply bond breakers if any, as recommended by prime material manufacturer.

APPLICATION, GENERAL

Comply with manufacturers written recommendations unless more stringent requirements are indicated or required by Project conditions to ensure satisfactory performance of dampproofing.

Apply additional coats if recommended by manufacturer or required to achieve coverage's indicated.

Allow each coat of dampproofing to cure 24 hours before applying subsequent Coats.

Apply dampproofing to provide continuous plane of protection on exterior face of inner wythe of exterior masonry cavity walls.

1. Lap dampproofing at least ¼ inch (6 mm) onto flashing, masonry reinforcement, veneer ties, and other items that penetrate inner wythe.
2. Extend dampproofing over outer face of structural members and concrete slabs that interrupt inner wythe, and lap dampproofing at least ¼ inch (6 mm) onto shelf angles supporting veneer.

COLD-APPLIED, EMULSIFIED-ASPHALT DAMPPROOFING

On Exterior Face of Inner Wythe of Cavity Walls: Apply primer and one brush or spray coat at not less than 1 gal./100 sq. ft. (0.4 L/sq.m).

CLEANING

Remove dampproofing materials from surfaces not intended to receive dampproofing.

END OF SECTION 07115

SECTION 07200 – BATT INSULATION

PART 1 – GENERAL

RELATED DOCUMENTS:

Drawings and general provisions of Contract including General and Supplementary Conditions and Division 1 Specification sections shall apply to work of this section.

DESCRIPTION OF WORK:

Extent of insulation work is shown on drawings and indicated by provisions of this section.

Applications of insulation specified in this section include the following:

1. Blanket-type at all exterior stud walls.
2. Sound Attenuation in interior metal stud walls.

SUBMITTALS;

Product Data: Submit manufacturer's product specifications and installation instructions for each type of insulation and vapor barrier material required.

PRODUCT HANDLING;

General Protection: Protect insulations from physical damage and from becoming wet, soiled, or covered with ice or snow. Comply with manufacturer's recommendations for handling, storage and protection during installation.

PART 2 – PRODUCTS

Manufacturers: The following manufacturers' products have been used to establish minimum standards for materials, workmanship and function:

Certain-Teed Products Corp.; Valley Forge, PA
Manville Bldg. Materials Corp.; Denver, CO.
Owens-Corning Fiberglass Corp.; Toledo, OH.

Equal products of other manufacturers may be used in the work, provided such products have been approved by the Architect, not less than five (5) days prior to scheduled bid opening.

Mineral/Glass Fiber Blanket/Batt Insulation (M/GFB-Ins): Inorganic (nonasbestos) fibers formed into resilient flexible blankets or semi-rigid batts; FS HH-1-521. Manufacturer's standard lengths and widths as required to coordinate with spaces to be insulated.

1. Exterior Walls:
   Batts will have a minimum **"R" value of 19** as follows:
   a. Provide foil scrim kraft fire-resistant vapor retarder facing (FSK-25, ASTM 84 – non-flammable) batts at all exterior walls that have no interior wall covering applied.
   b. Provide un-faced batts at all exterior wall applications that will receive interior wall coverings (ie: sheetrock, plywood, etc.).
   c. At the openings between the bar joist seats at the exterior walls, provide foil scrim kraft fire-resistant vapor retarder facing (FSK-25, ASTM 84 – non-flammable) batts, pack in opening between the bar joist seats.
3. Interior Walls: Unfaced Sound Attenuation batts at all interior stud walls. Full thickness of wall system shall be required.

PART 3 – EXECUTION

INSPECTION AND PREPARATION:

Installer must examine substrates and conditions under which insulation work is to be performed and must notify Contractor in writing of unsatisfactory conditions. Do not proceed with insulation work until unsatisfactory conditions have been corrected in manner acceptable to Installer.

Clean substrates of substances harmful to insulations or vapor barriers, including removal of projections which might puncture vapor barriers.

Close off openings in cavities to receive poured-in-place and insulation, sufficiently to prevent escape of insulation. Provide bronze or stainless steel screen (inside) where openings must be maintained for drainage or ventilation.

INSTALLATION:

General:

Comply with manufacturer's instructions for particular conditions of installation in each case. If printed instructions are not available or do not apply to project conditions, consult manufacturer's technical representative for specific recommendations before proceeding with work.

Extend insulation full thickness as shown over entire area to be insulated. Cut and fit

tightly around obstructions, and fill voids with insulation. Remove projections which interfere with placement.

PROTECTION:

General: Protect installed insulation and vapor barriers from harmful weather exposures and from possible physical abuses, where possible by non-delayed installation of concealing work or, where that is not possible, by temporary covering or enclosure. Installer shall advise Contractor of exposure hazards, including possible sources of deterioration and fire hazards.

END OF SECTION 07200

SECTION 07410 - PREFORMED METAL ROOFING AND INSULATION

PART 1 – GENERAL

RELATED DOCUMENTS:

Drawings and general provisions of Contract including General and Supplementary Conditions and Division 1 Specification sections apply to work of this section.

DESCRIPTION OF WORK:

Extent of each type of preformed metal roofing and insulation is indicated on the drawings and by provisions of this section. Preformed roofing/ is hereby defined to include panels which are structurally capable of spanning between supports spaced as indicated.

Types of panels required include the following:

1. Formed roof panels for standing seam installation.
2. Synthetic Underlayment - Ice and Water Shield
3. Metal Wall Panels
4. Flashings
5. Roof Curbs
6. Roof Jacks
7. Workmanship
8. Inspection of Surfaces
9. Protection
10. Delivery, Samples and Shop Drawings
11. Guarantee and Warranty

QUALITY ASSURANCE:

Performance Test Standards: Provide preformed panel systems which have been pretested and certified by manufacturer to provide specified resistance to air and water infiltration and structural deflection and failure when installed as indicated and when tested in accordance with AAMA 501, "Methods of Test for Metal Curtain Walls".

Field Measurements: Where possible, prior to fabrication of prefabricated panels, take field measurements of structure or substrates to receive panel system. Allow for trimming panel units where final dimensions cannot be established prior to fabrication.

ROOFERS QUALIFICATIONS

Installation of the metal roofing and roof related accessories shall be performed by **CERTIFIED/PREFERRED ROOFERS** authorized by the manufacturer as trained and qualified to erect the manufacturer's product.

The General Contractor shall submit a letter from the manufacturer of the metal roofing system, certifying the date of certification from the Manufacturer and the dates and year the Roofing Contractor attended school, prior to full certification that this Roofing Contractor is a certified roofer.

SUBMITTALS:

Product Data: Submit manufacturer's product specifications, standard details, certified product test results, installation instructions and general recommendations, as applicable to materials and finishes for each component and for total system of preformed panels.

Samples: Submit 2 samples 12" square, of each exposed finish material.

Shop Drawings: Submit small-scale layouts of panels on roofs, and large-scale details of edge conditions, joints, corners, custom profiles, supports, anchorages, trim, flashings, closures, and special details. Distinguish between factory an field assembly work.

WARRANTY:

WEATHER TIGHTNESS: The entire installation (sub-framing, clips, panels, fasteners, rakes, eave, ridge, valley flashing conditions, roof to wall conditions as well as all materials specified as supplied by the manufacture) shall be guaranteed weather tight for a minimum of twenty (20) years. Provide written warranty, signed by metal roofing manufacturer and his authorized installer, agreeing to replace/repair defective materials and workmanship during the warranty period, certified by the third party inspection firm as stated under QUALITY ASSURANCE. This warranty shall be identified as neither Non-Depreciating, Non-Pro-Rated, nor have exclusions that identify, valleys, curbs, and flashings. The warranty shall be limited to the value of the installed roof assembly, including all materials and labor. The warranty shall be signed by the Manufacture of the roofing materials and the authorized installer.

All roof warranty's shall be provided to the Owner, by the Contractor at the Final Inspection to obtain the Substantial Completion.

Standard manufacturer's roofing guarantees which contain language regarding the governing of the guarantee by any state other than the State of Alabama, must be amended to exclude such language, and substituting the requirement that the Laws of the State of Alabama shall govern all such guarantees.

The roofing manufacture shall be required to provide documentation certifying that the roof design provided complies with the performance requirements as set forth in IBC Chapter 15, Section 1504. The documentation shall be attached to the roof warranty at the close out of the project.

Roof Panels

Durability of the metallic coated and unpainted roof panels due to rupture, structural failure or perforation shall be warranted for a period of twenty (20) years by the manufacturer.

The exterior color finish for painted panels shall be warranted by the Manufacturer for twenty five (25) years against blistering, peeling, cracking, flaking, chalking and shipping. Excessive color change and chalking shall be warranted for twenty five (25) years. Color change shall not exceed 5 NBS units per ASTM D2244.68T, chalking shall not be less than a rating of 6 (white) or 8 (other colors) per ASTM D-659.

Compatibility: Provide products which are recommended by manufacturers to be fully compatible with indicated substrates, or provide separation materials as required to eliminate contact between incompatible materials.

DELIVERY, STORAGE AND HANDLING:

Deliver and store prefabricated components, sheets, panels and other manufactured items so they will not be damaged or deformed.

Stack materials on platforms or pallets, covered with tarpaulins or other suitable weathertight ventilated covering. Store metal sheets or panels so that water accumulations will drain freely. Do not store sheets or panels in contact with other materials which might cause staining.

PRE-ROOFING CONFERENCE:

A pre-roofing conference is required before any roofing materials are installed. This conference shall be conducted by a representative of the Architect and attended by representatives of the Owner, General Contractor, Roofing Contractor, Sheet Metal Contractor, Roof Deck Manufacturer and the Roofing Materials Manufacturer (if warranty is required of this manufacturer). If equipment of substantial size is to be placed on the roof, the Mechanical Contractor must also attend this meeting. Provide at least 72 hours advance notice to participants prior to convening pre-roofing conference.

The pre-roofing conference is intended to clarify demolition and application requirements for work to be completed before roofing operations can begin. This would include a detailed review of the specifications, roof plans, roof deck information, flashing details, and approved shop drawings, submittal data, and samples. If conflict exists between the specifications and the Manufacturer's requirements, this shall be resolved. If this pre-roofing conference cannot be satisfactorily concluded without further inspection and investigation by any of the parties present, it shall be reconvened at the earliest possible time to avoid delay of the work. In no case should the work proceed without inspection of all roof deck areas and substantial agreement on all points.

The following are to be accomplished during the conference:

1. To review all Factory Mutual and Underwriters Laboratories requirements listed in the specifications and resolve any questions or conflicts that may arise.
2. To establish trade-related job schedules, including the installation of roof-mounted mechanical equipment.
3. To establish roofing schedule and work methods that will prevent roof damage.
4. Require that all roof penetrations and walls be in place prior to installing the roof.
5. To establish those areas on the job site that will be designated as work and storage areas for roofing operations.
6. To establish weather and working temperature conditions to which all parties must agree.
7. To establish acceptable methods of protecting the finished roof if any trades must travel across or work on or above any areas of the finished roof.

The Architect shall prepare a written report indicating actions taken and decisions made at this pre-roofing conference. This report shall be made a part of the project record and copies furnished the General Contractor and the Owner.

PART 2 – PRODUCTS

Manufacturer: The following manufacturers' products have been used to establish minimum standard for materials, workmanship and function:

Roof Panel: Products shall be equal to or exceed the quality level of **Butler Buildings CMR-24 Panel (Kynar 500 Finish)** roof system. Other manufacturers are acceptable subject to compliance with specified requirements.

Butler Manufacturing
MBCI Manufacturing
Architectural Metal Systems

Equal products of other manufacturers may be used in the work, provided such products have been approved by the Architect.

Roof Panel - Standing seam roof panel shall have a configuration consisting of 2 inch high vertical rib spaced on 24 inch centers. The panel shall have flush horizontal and vertical surfaces to facilitate sealing at terminations. Panel configurations which create voids requiring supple metal closure devices shall not be considered acceptable. Panels shall be joined at the sidelap with an interlocking seam mechanically locked by a seaming machine after installation. The female panel seam

shall have a factory applied sealant, in compliance with UL90.

The panel shall be 24 gauge (minimum) commercially pure aluminum coated steel meeting military specification MIL-C-4174A Type II, Galvalume or G90 galvanized. Minimum yield stress shall be 50,000 PSI.

Deviations in appearance from the quality standard manufacturer's panel must be approved by the owner before acceptance.

Changes in framing or variations in loading to the existing structure caused by alternate roof systems shall be subject to review and all costs for any modifications shall be the responsibility of the General Contractor.

System Description: The roof system is a concealed fastener interlocking standing seam system. **Panel must not be roll formed on site, nor use a portable roll former whereby the contractor manufactures the panel versus a single sourced manufacture providing the finished materials with a single sourced warranty.**

Roof panels shall be standing seam interlocking design and secured to the supports with a concealed structural fastening system. UL certification must appear on the panel if so requested.

The concealed attachment system shall eliminate all through penetration of the exposed roofing surface into structural supports and allow the roof covering to move independently of any differential thermal movement by the framing system.

The panel to structural clip shall be designed to provide +/- one inch of thermal movement. It shall incorporate a self centered feature to assure one inch of movement in both directions.\\The standing seam shall have integral male and female interlocking ribs with a factory applied, non-hardening sealant, and the seams shall be continuously locked or crimped together by mechanical means during installation.

Roof panels shall be fastened to the support framing members with a concealed clip or backing device of steel having a protective metallic coating. Through penetration of the roofing surface by exposed fasteners shall occur only for non-structural connection at panel termination and roof perimeter flashing location.

Panel termination and perimeter flashing (attached to roof panels) shall be sealed with sealants recommended by the manufacturer.

Required closures shall be metal. Non-metal closures shall not be acceptable.

WALL PANEL

Manufacturer: The following manufacturers' products have been used to establish minimum standard for materials, workmanship and function:

Butler Buildings Flat 12” Panel – Concealed Fastener

Equal products of other manufacturers may be used in the work, provided such products have been approved by the Architect, not less than five (5) days prior to scheduled bid opening.

METAL FINISHES:

General: Apply coating either before or after forming and fabricating panels, as required by coating process and as required for maximum coating performance capability. Protect coating promptly after application and cure, by application of strippable film or removable adhesive cover, and retain until installation has been completed.

Fluoropolymer Coating at Trim and Siding: Full-strength 70% "Kynar 500" coating baked-on for 15 minutes at 450 degree F in a dry film thickness of 1.0 mil, 30% reflective gloss (ASTM D 523), over min. 0.2 mil baked-on modified epoxy primer.

Durability: Provide coating which has been field tested under normal range of weathering conditions for minimum of 20 years without significant peel, blister, flake, chip, crack or check in finish, and without chalking in excess of 8 (ASTM D 659), and without fading in excess of 5 NBS units.

MISCELLANEOUS MATERIALS:

Materials shall be appropriate manufacturer standard components in gauges and finish describe below.

Gauges of Materials:
Exterior Wall Panels - 22 ga.

PRE-FORMED METAL ROOFING SYSTEM COMPONENTS

ROOF FELT UNDERLAYMENT:

Manufacturer: The following manufacturers' products have been used to establish minimum standard for materials, workmanship and function:

Carlisle - “Dri-Start A”, Ice and Water Shield or SDP Palisade SA-HT or equal.

Equal products of other manufacturers may be used in the work, provided such products have been approved by the Architect.

Underlayment: Contractor shall install one layer of 40 mil. self adhering ice and water shield membrane equal to Carlisle: “Dri-Start A” or SDP Palisade SA-HT over the new rigid insulation board.

INSULATION:

Manufacturers: The following manufacturers' products have been used to establish minimum standards for materials, workmanship and function:

> RMax Multi-Max FA-3 closed cell polyisocyanurate rigid insulation board, **R30 minimum.**

Equal products of other manufacturers may be used in the work, provided such products have been approved by the Architect, not less than five (5) days prior to scheduled bid opening.

Description of Work: Gauges of Materials:

Extent of roofboard work is shown on drawings and indicated by provisions of this section.

1. The rigid insulation board shall be mechanically attached to the metal decking.

Materials:

Composition: Closed cell polyisocyanurate foam core bonded to glass fiber/organic mat facers on both sides,

1. Size: Nominal 4' x 8'.
2. Edges: Square.
3. R-Value: **R30**
4. Flame Spread: ASTM E84

Secure the insulation board with one mechanical fastener per four square feet opf insulation prior to the attachment of the metal panel system. Attachment of the securing brackets and/or devices must be with screws of sufficient length to penetrate the insulation and engage the roofing deck below by a minimum of 1”. Bearing plates shall be applied per the metal roofing panel manufacture.

Storage and Handling: Insulation must be kept dry before, during and after application. Outside storage must be off ground and protected by a breathable waterproof covering. If insulation becomes wet, it must be dried before installation. Insulation board must be roofed same day as laid.

Accumulation of water due to leaks or condensation in or on roofboard must be avoided during construction and after construction. Avoid overuse of non-vented, direct-fired heaters during winter months. Avoid application of insulation board during rain, heavy fogs and other conditions that may deposit moisture on the surface.

Consult manufacturer for specific installation instructions and standards for good roofing practices.

METAL FINISHES:

General: Apply coating either before or after forming and fabricating panels, as required by coating process and as required for maximum coating performance capability. Protect coating promptly after application and cure, by application of strippable film or removable adhesive cover, and retain until installation has been completed.

Color Finish on Wall and Roof Panel, Gutters, Downspouts and all Trim: Panels shall have a factory color finish on the exposed side. The exposed finish shall consist of a 70% KYNAR 500® resin base coating applied to a cleaned, pretreated and primed surface. The dry film thickness of the exterior coating shall not be less than .90 mil minimum, inclusive primer. The interior color finish shall consist of a backer coat with a dry film thickness of 0.5 mil. The exterior color finish shall meet or exceed the performance requirements specified below. A low gloss finish is required to minimize the appearance of oil canning.

Color of the exterior roof panels and trim shall be selected from manufactures Premium Color pallet. If Architect chooses a color from the manufactures standard pallet, the Contractor shall issue a deductive Change Order for the difference.

Paint Color Test:

1.	Test:	Film Thickness
	Test Method	ASTM D-1005
	Performance	0.2 mil primer 0.8-0.9 mil topcoat.
2.	Test	60° @ under 10 low gloss
	Test Method	ASTM D-523
	Performance	25-35
3.	Test	IR Reflectivity
	Test Method	ASTM D-4803-97
	Performance	Must meet 25% Minimum (exceeds)

4.	Test	Pencil Hardness
	Test Method	ASTM D-3363
	Performance	HB-H
5.	Test	Flexibility, T-Bend
	Test Method	ASTM D-4145
	Performance	2-T Galvalume Steel
6.	Test	Adhesion
	Test Method	ASTM D-3359
	Performance	No adhesion Loss
7.	Test	Reverse Impact
	Test Method	ASTM D-2794
	Performance	No cracking or loss of adhesion
8.	Test	Abrasion, Falling Sand
	Test Method	ASTM D-968
	Performance	65-85 1/mil
9.	Test	Mortar Resistance
	Test Method	ASTM C-267
	Performance	No effect
10.	Test	Detergent Resistance
	Test Method	ASTM D-2248 3% 72 hrs. @ 100°F
	Performance	No effect
11.	Test	Acid Pollutants
	Test Method	ASTM D-1308 10% Muriatic Acid (15 min) 20% Muriatic Acid (15 min)
	Performance	No effect, AAMA 605.2 <5units color change
12.	Test	Acid Rain Test
	Test Method	Kesternich
	Performance	15 cycles minimum, no objectionable color change
13.	Test	Alkali Resistance
	Test Method	20% Sodium Hydroxide (1hr)
	Performance	No effect
14.	Test	Salt Spray Resistance 5% @ 95° F
	Test Method	ASTM B-117
	Performance	1000 hrs Galvalume steel

15.	Test	Humidity Resistance 100% @ 100° F
	Test Method	ASTM D-2247
	Performance	Passes 1000 hrs Galvalume Steel
16.	Test	South Florida exposure
	Test Method	ASTM D-2244
	Performance	<5 units color change
17.	Test	UVB (313 bulbs)
	Test Method	ASTM G-53
	Performance	Passes 3000 hrs
18.	Test	Chalk Resistance
	Test Method	ASTM D-4214
	Performance	Rating of 8 min

Colors must meet the following: The solar reflectance for a steep-sloped roof must be a minimum of 25%, dropping no less than to 15% after three years. Low sloped roofs (below 2:12) must be a minimum of 65% dropping to no less than 50% after three years.

Accessories: Provide the following sheet metal accessories factory formed of the same material and finish as the roofing and siding.

1. Flashings.
2. Fillers.
3. Gutters and Downspouts
4. Metal expansion joints.
5. Ridge covers.

Flexible Closure Strips: Provide closed-cell, expanded cellular rubber, self-extinguishing flexible closure strips. Cut or premold closure strips to match corrugation configuration of roofing and siding sheets. Provide closure strips where indicated or necessary to ensure weathertight construction.

Sealing Tape: Provide pressure sensitive 100 percent solids grey polyisobutylene compound sealing tape with release paper backing. Provide permanently elastic, non-sag, non-toxic, non-staining tape not less than 1/2" wide and 1/8" thick.

Joint Sealants: Provide one-part elastomeric polyurethane polysulfide or silicone rubber sealant as recommended by the building manufacturer.

MISCELLANEOUS MATERIALS:

Internal Panel Framing: Manufacturer's standard.

Fasteners: Manufacturer's standard noncorrosive types, with exterior heads gasketed.

Accessories: Except as indicated as work of another specification section, provide components required for a complete roofing/siding system, including trim, copings, fascias, gravel stops, mullions, sills, corner units, ridge closures, clips, seam covers, battens, flashings, gutters, louvers, sealants, gaskets, fillers, closure strips and similar items. Match materials/finishes of preformed panels.

Bituminous Coating: Cold-applied asphalt mastic, SSPC paint 12, compounded for 15 mil dry film thickness per coat.

ROOF PANEL FABRICATION PERFORMANCES:

General: Fabricate and finish panels and accessories at the factory to greatest extent possible, by manufacturer's standard procedures and processes, and as required to fulfill indicated performance requirements which have been demonstrated by factory testing. Comply with indicated profiles and dimensional requirements, and with structural requirements.

Metal Gages: Thickness required for structural performances, but not less than manufacturer’s recommended minimums for profiles and applications indicated, and not less than 24 gauge.

Required Performances: Fabricate panels and other components of roof/wall system for the following installed performances.

1. Roof Loading: 40 lbs. per sq. ft. inward; 15 lbs per sq. ft. outward.
2. Water Penetration: No significant, uncontrolled leakage at 4 lbs. per sq. ft. pressure with spray test.
3. Air Infiltration: 0.02 cfm per sq. ft. for gross roof/wall areas, with 4 lbs. per sq. ft. differential pressure.
4. Sound Transmission: STC rating of 28.
5. Wind Load: Per IBC 2009.

Apply bituminous coating or other permanent separation materials on concealed panel surfaces where panels would otherwise be in direct contact with substrate materials which are noncompatible or could result in corrosion or deterioration of either material or finishes.

Fabricate panel joints with captive gaskets or separator strips, which provide a tight seal and prevent metal-to-metal contact in a manner which will minimize noise from movements within panel system.
Condensation: Fabricate panels for control of condensation, including vapor inclusion of seals and provisions for breathing, venting, weeping and draining.

SHEET METAL ACCESSORIES:

General: Provide coated steel sheet metal accessories with coated steel roofing and siding panels.

Gauges of Materials:

1. Wall and Roof Panels - 24 ga.
2. Rake Flashing 26 ga.

Roof Curbs: The fully welded roof curb units shall be fabricated to the specifications of the roofing manufacturer, thus assuring its compatibility with the roof constructions framing and covering. Roof curbs shall be of size and design to accommodate the various projecting elements to be retained. The contractor is responsible for verification of the various sizes, configurations, and requirements. It is expected that the contractor use the existing conditions, surfaces, and elements as a source material for these requirements. The roof curb shall be of size and design required for fan, vent or air conditioning equipment. It shall support the specific ventilating device in a nominally horizontal position above the weather surface of the roof and adequately deflect storm drainage around its periphery. All sealants, closures and fasteners, etc. shall be included for proper installation and performance. Roof subframing and/or headers shall be provided for additional rigidity and support of the curb and its ventilating device. Roof vent curb and supporting framing shall provide for expected expansion and contraction of roof panels.

Roof Jacks: Openings 8” in diameter or smaller may be flashed and sealed to the roof panel by jacks. Material shall be an EPDM material with an aluminum sealing ring base. Jacks are acceptable providing attachment in flat of panel and no standing seam rib has been altered. If rib must be cut, a curb must be used. Installation of roof jacks must comply with manufacturer’s instructions.

FABRICATION:

General: Design prefabricated components and necessary field connections required for erection to permit easy assembly and disassembly. Fabricate components in such a manner that once assembled, they may be disassembled, repackaged and reassembled with a minimum amount of labor.

1. Clearly and legibly mark each piece and part of the assembly to correspond with previously prepared erection drawings, diagrams and instruction manuals.

PART 3 – EXECUTION

INSTALLATION:

General: Comply with panel fabricator's and material manufacturer's instructions and recommendations for installation, as applicable to project conditions and supporting substrates. Anchor panels and other components of the work securely in place, with provisions for thermal/structural movement.

1. Install panels with concealed fasteners.

Installation Tolerances: Shim and align panel units within installed tolerance of 1/4" in 20'-0" on level/plumb/slope and location/line as indicated, and within 1/8" offset of adjoining faces and of alignment of matching profiles.

Joint Sealers: Install gaskets, joint fillers and sealants where indicated and where required for weatherproof performance of panel systems. Provide types of gaskets and sealants/fillers indicated or, if not otherwise indicated, types recommended by panel manufacturer.

Refer to other sections of these specifications for product and installation requirements applicable to indicated joint sealers.

CLEANING AND PROTECTION:

Damaged Units: Replace panels and other components of the work which have been damaged or have deteriorated beyond successful repair by means of finish touch-up or similar minor repair procedures.

Cleaning: Remove temporary protective coverings and strippable films (if any) as each panel is installed. Upon completion of panel installation, clean finished surfaces as recommended by panel manufacturer, and maintain in a clean condition during construction.

END OF SECTION 07410

SECTION 07460 – FIBER CEMENT SOFFITS AND TRIM

PART 1 – GENERAL

RELATED DOCUMENTS:

Drawings and general provisions of Contract including General and Supplementary Conditions and Division 1 Specification sections apply to work of this section.

DESCRIPTION OF WORK:

Factory-finished fiber cement trim, fascia, soffits and accessories.

RELATED SECTIONS

1. Section 05540 - Light Gage Metal Framing: Wall framing and bracing.
2. Section 06100 - Rough Carpentry: Wood framing and bracing.
3. Section 06100 - Rough Carpentry: Sheathing.
4. Section 07200 - Insulation: Exterior wall insulation.

REFERENCES

ASTM E136 - Standard Test Method for Behavior of Materials in a Vertical Tube Furnace at 750 degrees C.

SUBMITTALS

Product Data: Manufacturer's data sheets on each product to be used, including:

1. Preparation instructions and recommendations.
2. Storage and handling requirements and recommendations.
3. Installation methods.

Shop Drawings: Provide detailed drawings of atypical non-standard applications of cementitious siding materials which are outside the scope of the standard details and specifications provided by the manufacturer.

Selection Samples: For each finish product specified, two complete sets of color chips representing manufacturer's full range of available colors and patterns.

Verification Samples: For each finish product specified, two samples, minimum size 4 by 6 inches (100 by 150 mm), representing actual product, color, and patterns.

QUALITY ASSURANCE

Installer Qualifications: Minimum of 2 years experience with installation of similar products.

DELIVERY, STORAGE, AND HANDLING

Store products in manufacturer's unopened packaging until ready for installation.

Store siding on edge or lay flat on a smooth level surface. Protect edges and corners from chipping. Store sheets under cover and keep dry prior to installing.

Store and dispose of solvent-based materials, and materials used with solvent-based materials, in accordance with requirements of local authorities having jurisdiction.

PROJECT CONDITIONS

Maintain environmental conditions (temperature, humidity, and ventilation) within limits recommended by manufacturer for optimum results. Do not install products under environmental conditions outside manufacturer's absolute limits.

WARRANTY

Product Warranty: Limited, non-pro-rated product warranty.

1. HardieSoffit HZ10 panels for 30 years.
2. HardieTrim HZ10 boards for 15 years.

Finish Warranty: 15 years - will not peel; will not crack; and will not chip. Finish warranty includes the coverage for labor and material.

Workmanship Warranty: Application limited warranty for 2 years.

PART 2 – PRODUCTS

Manufacturers: The following manufacturers' products have been used to establish minimum standards for materials, workmanship and function:

James Hardie Building Products
Cemplank Corporation
Certain Teed Corporation

Equal products of other manufacturers may be used in the work provided such products have been approved by the Architect, not less than five (5) days prior to scheduled bid opening.

Soffit Panels: Equal to HardieSoffit HZ10 soffit panel, factory sealed on 5 sides as manufactured by James Hardie Building Products, Inc.

1. Type: Beaded Porch Panel, 3.5” smooth, with trim at joints.

Trim: Equal to HardieTrim HZ10 boards as manufactured by James Hardie Building Products, Inc.

1. Texture: Smooth.
2. Length: 12 feet (3658 mm).
   Thickness: 3/4 inch (19 mm) see drawings.
3. HardieTrim HZ10 Fascia boards as manufactured by James Hardie Building Products, Inc.

FASTENERS

Metal Framing: All fasteners to be corrosion resistant.

FINISH

Factory Primer: Provide factory applied universal primer.

Primer: Factory primed by James Hardie.

Factory Finish: ColorPlus Technology by James Hardie.

Factory applied finish; defined as a finish applied in the same facility and company that manufactures the siding substrate.

Process:

Factory applied finish by fiber cement manufacturer in a controlled environment within the fiber cement manufacturer's own facility utilizing a multi-coat, heat cured finish within one manufacturing process.

Each finish color must have documented color match to delta E of 0.5 or better between product lines, manufacturing lots or production runs as measured by photospectrometer and verified by third party.

Protection: Factory applied finish protection such as plastic laminate that is removed once siding is installed.

Accessories: Complete finishing system includes pre-packaged touch-up kit provided by fiber cement manufacturer. Provide quantities as recommended by manufacturer.

Factory Finish Color for Trim and Soffit shall be selected from manufactures standards.

PART 3 – EXECUTION

EXAMINATION

Do not begin installation until substrates have been properly prepared.

If framing preparation is the responsibility of another installer, notify Architect of unsatisfactory preparation before proceeding.

Metal framing provisions: Minimum 20 gauge 3-5/8 inch (92 mm) C-Stud 16 inches maximum on center or 16 gauge 3-5/8 inches (92 mm) C-Stud 24 inches (610 mm) maximum on center metal framing complying with local building codes, including the use of water-resistive barriers and/or vapor barriers where required. Minimum 1-1/2 inches (38 mm) face and straight, true, of uniform dimensions and properly aligned.

1. Install water-resistive barriers and claddings to dry surfaces.
2. Repair any punctures or tears in the water-resistive barrier prior to the installation of the siding.
3. Protect siding from other trades.

PREPARATION

Clean surfaces thoroughly prior to installation.

Prepare surfaces using the methods recommended by the manufacturer for achieving the best result for the substrate under the project conditions.

Install a water-resistive barrier is required in accordance with local building code requirements.

The water-resistive barrier must be appropriately installed with penetration and junction flashing in accordance with local building code requirements.

Install Engineered for ClimateTM HardieWrapTM weather barrier in accordance with local building code requirements.

Use HardieWrapTM Seam Tape and joint and laps.
Install and HardieWrapTM flashing, HardieWrapTM Flex Flashing.

INSTALLATION VERTICAL SIDING

Install materials in strict accordance with manufacturer's installation instructions.

Block framing between studs where HardiePanel siding horizontal joints occur.

Install metal Z flashing and provide a 1/4 inch (6 mm) gap at horizontal panel joints.

Place fasteners no closer than 3/8 inch (9.5 mm) from panel edges and 2 inches (51 mm) from panel corners.

Allow minimum vertical clearance between the edge of siding and any other material in strict accordance with the manufacturer's installation instructions.

Maintain clearance between siding and adjacent finished grade.

Specific framing and fastener requirements refer to Tables 2 and 3 in National Evaluation Service Report No. NER-405.

Factory Finish Touch Up: Apply touch up paint to cut edges in accordance with manufacturer's printed instructions.

1. Touch-up nicks, scrapes, and nail heads in pre-finished siding using the manufacturer's touch-up kit pen.
2. Touch-up of nails shall be performed after application, but before plastic protection wrap is removed to prevent spotting of touch-up finish.
3. Use touch-up paint sparingly. If large areas require touch-up, replace the damaged area with new pre-finished siding. Match touch up color to siding color through use of manufacturer's branded touch-up kits.

INSTALLATION - TRIM HZ10 BOARDS

Install materials in strict accordance with manufacturer's installation instructions. Install flashing around all wall openings.

Fasten through trim into structural framing or code complying sheathing. Fasteners must penetrate minimum 3/4 inch (19 mm) or full thickness of sheathing. Additional fasteners may be required to ensure adequate security.

Place fasteners no closer than 3/4 inch (19 mm) and no further than 2 inches (51 mm) from side edge of trim board and no closer than 1 inch (25 mm) from end. Fasten maximum 16 inches (406 mm) on center.

Maintain clearance between trim and adjacent finished grade.

1. Trim inside corner with a single board trim both side of corner.
2. Outside Corner Board Attach Trim on both sides of corner with 16 gage corrosion resistant finish nail 1/2 inch (13 mm) from edge spaced 16 inches (406 mm) apart, weather cut each end spaced minimum 12 inches (305 mm) apart.
3. Allow 1/8 inch gap between trim and siding.
4. Seal gap with high quality, paint-able caulk.

Shim frieze board as required to align with corner trim..

Fasten through overlapping boards. Do not nail between lap joints.

Overlay siding with single board of outside corner board then align second corner board to outside edge of first corner board. Do not fasten HardieTrim boards to HardieTrim boards.

Shim frieze board as required to align with corner trim.

Install HardieTrim Fascia boards to rafter tails or to sub fascia.

PROTECTION

Protect installed products until completion of project.

Touch-up, repair or replace damaged products before Substantial Completion.

END OF SECTION 07460

SECTION 07600 - FLASHING AND SHEET METAL

PART 1 – GENERAL

RELATED DOCUMENTS:

Drawings and general provisions of the contract including General and Supplementary Conditions and Division 1 Specification Sections apply to work of this section.

DESCRIPTION OF WORK:

Extent of each type of flashing and sheet metal work is indicated on drawings and by provisions of this section.

Types of work specified in this section include the following:

1. Exposed metal trim units, etc.
2. Metal counter flashing and base flashing (if any).
3. Elastic flashing.

Integral masonry flashings are specified as masonry work in sections of Division 4.

SUBMITTALS:

Product Data; Flashing, Sheet Metal, Accessories: Submit manufacturer's product data, installation instructions and general recommendations for each specified sheet material and fabricated product.

JOB CONDITIONS:

Coordinate work of this section with interfacing and adjoining work for proper sequencing of each installation. Ensure best possible weather resistance and durability of work and protection of materials and finishes.

PART 2 – PRODUCTS

FLASHING AND SHEET METAL MATERIALS:

Sheet Metal Flashing, Trim: ASTM B 209, alloy 3003, temper H14, Kynar 500, 70% finish, 0.032" thick aluminum, color to be selected from manufactures standards.

Elastic Sheet Flashing/Membrane:

1. Provide EPDM synthetic rubber sheet equal to Grace Perm-A-Barrier with Perm-A-Barrier Primer Plus. Perm-A-Barrier shall be installed on all sills and heads ½" inward from outside face of wall and extended 6" on each side of opening brick veneer construction. The sheeting shall not be allowed to hang free prior to completion of brick work but shall be secured to the siding with nails and discs or furring strips. Substitutions allowed with prior approval of architect.

Miscellaneous Materials and Accessories:

Solder: For use with steel or copper, provide 50 - 50 tin/lead solder (ASTM B 32), with rosin flux.

Fasteners: Same metal as flashing/sheet metal or, other noncorrosive metal as recommended by sheet manufacturer. Match finish of exposed heads with material being fastened.

Bituminous Coating: FS TT-C-494 or SSPC - Paint 12, solvent type bituminous mastic, nominally free of sulfur, compounded for 15-mil dry film thickness per coat.

Mastic Sealant: Polyisobutylene; nonhardening, nonskinning, non- drying, nonmigrating sealant.

Epoxy Seam Sealer: 2-part noncrossive metal seam cementing compound, recommended by metal manufacturer for exterior/interior non-moving joints including riveted joints.

Adhesives: Type recommended by flashing sheet manufacturer for waterproof/ weather-resistant seaming and adhesive application of flashing sheet.

Paper Slip Sheet: 5-lb. rosin-sized building paper.

Polyethylene Underlayment: 6-mil carbonated polyethylene film; FS L-P-512.

Reglets: Metal or plastic units of type and profile indicated, compatible with flashing indicated, noncrossive.

Metal Accessories: Provide sheet metal clips, straps, anchoring devices and similar accessory units as required for installation of work, matching or compatible with material being installed, noncrossive, size and gage required for performance.

Roofing Cement: Must be compatible with materials with which it comes in contact.

FABRICATED UNITS:

General Metal Fabrication: Shop-fabricate work to greatest extent possible. Comply with details shown, and with applicable requirements of SMACNA "Architectural Sheet Metal Manual" and other recognized industry practices. Fabricate for waterproof and weather-resistant performance; with expansion provisions for running work, sufficient to permanently prevent leakage, damage or deterioration of the work. Form work to fit substrates. Comply with material manufacturer instructions and recommendations for forming material. Form exposed sheet metal work without excessive oil-canning, buckling and tool marks, true to line and levels indicated, with exposed edges folded back to form hems.

Seams: Fabricate nonmoving seams in sheet metal with flat-lock seams. For metal other than aluminum, tin edges to be seamed, form seams, and solder. Form aluminum seams with epoxy seam sealer; rivet joints for additional strength where required.

Expansion Provisions: Where lapped or bayonet-type expansion provisions in work cannot be used, or would not be sufficiently water/weatherproof, form expansion joints of intermeshing hooked flanges, not less than 2" deep, filled with mastic sealant (concealed within joints).

Sealant Joints: Where movable, non-expansion type joints are indicated or required for proper performance of work, form metal to provide for proper installation of elastomeric sealant, in compliance with SMACNA standards.

Separations: Provide for separation of metal from noncompatible metal or corrosive substrates by coating concealed surfaces at locations of contact, with bituminous coating or other permanent separation as recommended by manufacturer/fabricator.

PART 3 – EXECUTION

INSTALLATION REQUIREMENTS:

General: Except as otherwise indicated, comply with manufacturer's installation instructions and recommendations, and with SMACNA "Architectural Sheet Metal Manual".

Anchor units of work securely in place by methods indicated, providing for thermal expansion of metal units; conceal fasteners where possible, and set units true to line and level as indicated. Install work with laps, joints and seams which will be permanently watertight and weatherproof.

Underlayment: Where aluminum is to be installed directly on cementitious or wood substrates, install a slip sheet of red rosin paper and a course of polyethylene underlayment.
Bed flanges of work in a thick coat of bituminous roofing cement where required for waterproof performance.

Install reglets to receive counter-flashing in manner and by methods indicated. Where shown in concrete, furnish reglets to trades of concrete work for installation as work of Division-3 sections. Where shown in masonry, furnish reglets to trades of masonry work, for installation as work of Division-4 sections.

1. Install counter-flashing in reglets, either by snap-in seal arrangement, or by wedging in place for anchorage and filling reglet with mastic or elastomeric sealant, as indicated and depending on degree of sealant exposure.

CLEANING AND PROTECTION:

Clean exposed metal surfaces, removing substances which might cause corrosion of metal or deterioration of finishes.

Protection: Installer shall advise Contractor of required procedures for surveillance and protection of flashings and sheet metal work during construction, to ensure that work will be without damage or deterioration, other than natural weathering, at time of substantial completion.

END OF SECTION 07600

SECTION 07900 - JOINT SEALERS

PART 1 – GENERAL

RELATED DOCUMENTS:

Drawings and general provisions of Contract including General and Supplementary Conditions and Division 1 Specification sections apply to work of this section.

DESCRIPTION OF WORK:

The extent of each form and type of joint sealer is indicated on drawings and by provisions of this section.

The applications for joint sealers as work of this section include the following:

1. Joints (Interior).
2. Joints (Exterior).
3. Flashing Joints.
4. Interior wall/ceiling joints.

General Performance: Except as otherwise indicated, joint sealers are required to establish and maintain airtight and waterproof continuous seals on a permanent basis, within recognized limitations of wear and aging as indicted for each application. Failures of installed sealers to comply with this requirement will be recognized as failures of materials and workmanship.

SUBMITTALS:

Product Data: Submit manufacturer's product specifications, handling/installation/curing instructions, and performance tested data sheets for each elastomeric product required.

JOB CONDITIONS:

Weather Conditions: Do not proceed with installation of liquid sealants under unfavorable weather conditions. Install elastomeric sealants when temperature by manufacturer for installation.

PART 2 – PRODUCTS

ACCEPTABLE MANUFACTURERS:

General: manufacturers listed in this article include those known to produce the indicated category of prime joint sealant material, either as a nominally pure generic product or as an equivalent-performance modification thereof or proprietary product.

Manufacturers: The following manufacturer's products have been used to establish minimum standards for materials, workmanship and function:

1. Acrylic Emulsion Latex Sealants:
   Bostik.
   Pecora Corp.
   Sonneborn Building Products.
   Tremco, Inc.
2. Polyurethane Sealants:
   Bostik.
   Master Builders.
   Pecora Corp.
   Sonneborn Building Products.
   Tremco, Inc.
3. Butyl Sealants:
   Bostik.
   TEC Incorporated.
   Tremco, Inc.

Equal products of other manufacturers may be used in the work, provided such products have been approved by the Architect, not less than five (5) days prior to scheduled bid opening.

MATERIALS:

NOTE: The use of silicone sealants shall not be used at any exterior conditions.

General Purpose Exterior Sealant: Polyurethane; ASTM C 920, Grade NS, Class 25, Uses M, G, and A; single component. (Silicone sealant shall not be used at exterior conditions).

1. Color: Standard colors matching finished surfaces.
2. Applications: Use for:
   a. Control, expansion, and soft joints in masonry, stone or concrete.
   b. Joints between concrete and other materials.
   c. Joints between metal frames and other materials.
   d. Other exterior joints for which no other sealant is indicated.

Exterior Metal Lap Joint Sealant: Butyl or polyisobutylene, nondrying, nonskinning, noncuring.

1. Applications: Use for:
   a. Concealed sealant bead in sheet metal work.

General Purpose Interior Sealant: Acrylic emulsion latex; ASTM C 834, single component, paintable.

1. Color: Standard colors matching finished surfaces.
2. Applications: Use for:
   a. Interior wall and ceiling control joints.
   b. Joints between door and window frames and wall surfaces.
   c. Other interior joints for which no other type of sealant is indicated.

Acoustical Sealant: Butyl or acrylic sealant; ASTM C 920, Grade NS, Class 12-1/2, Uses M and A; single component, solvent release curing, nonskinning.

1. Applications: Use for concealed locations only:
   a. Sealant bead between top stud runner and structure and between bottom stud track and floor or wall.

Paving Joint Sealant: Polyurethane, self-leveling; ASTM C 920, Class 25, Uses T, M and A; single component.

1. Color: Standard color matching finished surfaces.
2. Applications: Use for:
   a. Joints in sidewalks and paving, either vehicular or pedestrian.
   b. Isolation joints and control joints in slabs on grade.

Bituminous and Fiber Joint Filler (BtmF-JF) provide resilient and non-extruding type premolded bituminous-impregnated fiberboard units complying with ASTM D 1751; FS HH-F-341, Type I; or AASHTO M213.

Miscellaneous Materials:

Joint Primer/Sealer: Provide type of joint primer/sealer recommended by sealant manufacturer for joint surfaces to be primed or sealed.

Bond Breaker Tape (BB-Tp): Provide polyethylene tape or other plastic tape as recommended by sealant manufacturer, to be applied to sealant-contact surfaces where bond to substrate or joint filler must be avoided for proper performance of sealant. Provide self-adhesive tape where applicable.

Sealant Backer Rod (S-BR): provide compressible rod stock of polyethylene foam, polyurethane foam, polyethylene jacketed polyurethane foam, butyl rubber foam, neoprene foam or other recommended by sealant manufacturer for back-up of and compatibility with sealant. Where used with hot-applied sealant, provide heat-resistant type which will not be deteriorated by sealant application temperature as indicated.

PART 3 – EXECUTION

INSPECTION:

Installer must examine substrate, (joint surfaces) and conditions under which joint sealer work is to be performed and must notify Prime Contractor of unsatisfactory conditions.

JOINT PREPARATION:

Clean joint surfaces immediately before installation of gaskets, sealants or caulking compounds. Remove dirt, insecure coatings, moisture and other substrate which could interfere with seal of gasket or bond of sealant of caulking compound. Etch concrete and masonry joint surfaces as recommended by sealant manufacturer. Roughen vitreous and glazed joint surfaces as recommended by sealant manufacturer.

Prime or seal joint surfaces where indicated, and where recommended by sealant manufacturer. Confine primer/sealer to areas of sealant bond; do not allow spillage or migration onto adjoining surfaces.

INSTALLATION:

Comply with manufacturer's printed instructions except where more stringent requirements are shown on specified, and except where manufacturer's technical representative directs otherwise.

Set joint filler units at depth or position in joint as indicated to coordinate with other work, including installation of bond breakers, backer rods and sealant. Do not leave voids or gaps between ends of joint filler units.

Install sealant backer rod for liquid-applied sealants, except where shown to be omitted or recommended to be omitted by sealant manufacturer for application indicated.

Install bond breaker tape where indicated and where required by manufacturer's recommendations to ensure that liquid-applied sealants will perform as intended.

Employ only proven installation techniques, which will ensure that sealants are deposited in uniform, continuous ribbons without gaps or air pockets, with complete "wetting" of joint bond surfaces equally on opposite sides. Except as otherwise indicated, fill sealant rabbet to a slightly concave surface, slightly below adjoining surfaces. Where horizontal joints are between a horizontal surface and vertical surface, fill joint to form a slight cove, so that joint will not trap moisture and dirt.

Install sealant to depths as shown or, if not shown, as recommended by sealant manufacturer but within the following general limitations, measured at center (thin) section of beads;

For normal moving joints sealed with elastomeric sealants but not subject to traffic, fill joints to a depth equal to 50% of joint width, but neither more than 1/2" deep nor less than 1/4" deep.

Spillage: Do not allow sealants or compounds to overflow from confines of joints, or to spill onto adjoining work, or to migrate into voids of exposed finishes. Clean adjoining surfaces by whatever means may be necessary to eliminate evidence of spillage.

Recess exposed edges of gaskets and exposed joint fillers slightly behind adjoining surfaces, unless otherwise shown, so that compressed units will not protrude from joints.

Bond ends of gaskets together with adhesive of "weld" by other means as recommended by manufacturer to ensure continuous watertight and airtight performance. Miter-cut and bond ends at corners unless molded corner units are provided.

CURE AND PROTECTION:

Cure sealants and caulking compounds in compliance with manufacturer's instructions and recommendations, to obtain high early bond strength, internal cohesive strength and surface durability. Advise Prime Contractor of procedures required for cure and protection of joint sealers during construction period, so that they will be without deterioration or damage (other than normal wear and weathering) at time of substantial completion. Cure and protect sealants in manner which will minimize increases in modulus of elasticity and other accelerated aging effects. Replace or restore sealants which are damaged or deteriorated during construction period.

END OF SECTION 07900

SECTION 08110 - STEEL DOORS AND FRAMES

PART 1 – GENERAL

RELATED DOCUMENTS:

Drawings and general provisions of Contract including General and Supplementary Conditions and Division 1 Specification sections apply to work of this section.

SUMMARY

This Section includes steel doors and frames.

Related Sections: The following Sections contain requirements that relate to this Section:

1. Division 4 Section "Unit Masonry" for building anchors into and grouting frames in masonry construction.
2. Division 8 Section "Flush Wood Doors" for hollow-core and solid-core wood doors installed in steel frames.
3. Division 8 Section "Door Hardware" for door hardware and weatherstripping.
4. Division 8 Section "Glazing" for glass in steel doors and sidelights.
5. Division 9 Section "Gypsum Board Assemblies" for spot grouting frames in gypsum board partitions.
6. Division 9 Section "Painting" for field painting primed doors and frames.

SUBMITTALS

General: Submit each item in this Article according to the Conditions of the Contract and Division 1 Specification Sections.

Product Data for each type of door and frame specified, including details of construction, materials, dimensions, hardware preparation, core, label compliance, sound ratings, profiles, and finishes.

Shop Drawings showing fabrication and installation of steel doors and frames. Include details of each frame type, elevations of door design types, conditions at openings, details of construction, location and installation requirements of door and frame hardware and reinforcements, and details of joints and connections. Show anchorage and accessory items.

Door Schedule: Submit schedule of doors and frames using same reference numbers for details and openings as those on Contract Drawings.

1. Indicate coordination of glazing frames and stops with glass and glazing requirements.

Samples for initial selection in the form of manufacturer's color charts showing the full range of colors available for factory-finished doors and frames.

Samples for verification of each type of exposed finish required, prepared on Samples not less than 3 by 5 inches (75 by 125 mm) and of same thickness and material indicated for final unit of Work. Where finishes involve normal color and texture variations, include Sample sets showing the full range of variations expected.

Oversize Construction Certification: For door assemblies required to be fire rated and exceeding limitations of labeled assemblies, submit certification of a testing agency acceptable to authorities having jurisdiction that each door and frame assembly has been constructed to conform to design, materials, and construction equivalent to requirements for labeled construction.

QUALITY ASSURANCE

Provide doors and frames complying with ANSI/SDI 100 "Recommended Specifications for Standard Steel Doors and Frames" and as specified.

Fire-Rated Door Assemblies: Units that comply with NFPA 80, are identical to door and frame assemblies tested for fire-test-response characteristics per ASTM E 152, and are labeled and listed by UL, Warnock Hersey, or another testing and inspecting agency acceptable to authorities having jurisdiction.

1. Oversize Fire-Rated Door Assemblies: For units exceeding sizes of tested assemblies, provide certification by a testing agency acceptable to authorities having jurisdiction that doors conform to all standard construction requirements of tested and labeled fire-rated door assemblies except for size.
2. Temperature-Rise Rating: Where indicated, provide doors that have a temperature-rise rating of 450 deg F (250 deg C) maximum in 30 minutes of fire exposure.

DELIVERY, STORAGE AND HANDLING

Deliver doors and frames cardboard-wrapped or crated to provide protection during transit and job storage. Provide additional protection to prevent damage to finish of factory-finished doors and frames.

Inspect doors and frames on delivery for damage. Minor damages may be repaired provided refinished items match new work and are acceptable to Architect; otherwise, remove and replace damaged items as directed.

Store doors and frames at building site under cover. Place units on minimum 4-inch- (100-mm-) high wood blocking. Avoid using non-vented plastic or canvas shelters that could create a humidity chamber. If cardboard wrappers on doors become wet, remove cartons immediately. Provide minimum 1/4-inch (6-mm) spaces between stacked doors to promote air circulation.

PART 2 – PRODUCTS

MANUFACTURERS

Available Manufacturers: Subject to compliance with requirements, manufacturers offering products that may be incorporated in the Work include, but are not limited to, the following:

1. Steel Doors and Frames:
    a. Pioneer Hollow Metal Products
    b. HMF
    c. Windsor Republic Doors Frames

MATERIALS

Hot-Rolled Steel Sheets and Strip: Commercial-quality carbon steel, pickled and oiled, complying with ASTM A 569 (ASTM A 569M).

Cold-Rolled Steel Sheets: Carbon steel complying with ASTM A 366 (ASTM A 366M), commercial quality, or ASTM A 620 (ASTM A 620M), drawing quality, special killed.

Galvanized Steel Sheets: Zinc-coated carbon steel complying with ASTM A 526 (ASTM A 526M), commercial quality, or ASTM A 642 (ASTM A 642M), drawing quality, hot-dip galvanized according to ASTM A 525, with A 60 or G 60 (ASTM A 525M, with Z 180 or ZF 180) coating designation, mill phosphatized.

Supports and Anchors: Fabricated from not less than 0.0478-inch- (1.2-mm-) thick steel sheet; 0.0516-inch- (1.3-mm-) thick galvanized steel where used with galvanized steel frames.

Inserts, Bolts, and Fasteners: Manufacturer's standard units. Where items are to be built into exterior walls, hot-dip galvanize complying with ASTM A 153, Class C or D as applicable.

DOORS

Steel Doors: Provide 1-3/4-inch- (44-mm-) thick doors of materials and ANSI/SDI 100 grades and models specified below, or as indicated on Drawings or schedules:

1. Interior Doors: Grade II, heavy-duty, Model 2, seamless faces and edges, 18 gage cold-rolled steel sheet faces.
2. Exterior Doors: Grade III, heavy-duty, Model 2, seamless faces and edges, 16 gage galvanized steel sheet faces.

Door Louvers: Provide louvers according to SDI 111C for interior doors where indicated, with blades or baffles formed of 0.0239-inch- (0.6-mm-) thick cold-rolled steel sheet set into minimum 0.0359-inch- (0.9-mm-) thick steel frame.

1. Sight-Proof Louvers: Stationary louvers constructed with inverted V-shaped or Y-shaped blades.

FRAMES

Provide metal frames for doors, transoms, sidelights, borrowed lights, and other openings, according to ANSI/SDI 100, and of types and styles as shown on Drawings and schedules. Conceal fastenings, unless otherwise indicated. Fabricate frames as follows:

1. Fabricate frames with mitered or coped and face welded corners.
2. Fabricate frames for exterior openings of 16 gage galvanized steel sheet.
3. Fabricate frames for interior openings of 16 gage cold rolled steel sheet.

Door Silencers: Except on weather stripped frames, drill stops to receive 3 silencers on strike jambs of single-door frames and 2 silencers on heads of double-door frames.

Plaster Guards: Provide minimum 0.0179-inch- (0.45-mm-) thick steel plaster guards or mortar boxes at back of hardware cutouts where mortar or other materials might obstruct hardware operation and to close off interior of openings.

Grout: When required in masonry construction, as specified in Division 4 Section "Unit Masonry."

FABRICATION

Fabricate steel door and frame units to be rigid, neat in appearance, and free from defects, warp, or buckle. Where practical, fit and assemble units in manufacturer's plant. Clearly identify work that cannot be permanently factory assembled before shipment, to assure proper assembly at Project site. Comply with ANSI/SDI 100 requirements.

1. Internal Construction: One of the following manufacturer's standard core materials according to SDI standards:
   a. Interior Doors - 3/4" Cell Honeycomb
   b. Exterior Doors – Insulated Polystyrene Core
2. Clearances: Not more than 1/8 inch (3.2 mm) at jambs and heads, except not more than 1/4 inch (6.4 mm) between non-fire-rated pairs of doors. Not more than 3/4 inch (19 mm) at bottom.
   a. Fire Doors: Provide clearances according to NFPA 80.

Fabricate exposed faces of doors and panels, including stiles and rails of nonflush units, from only cold-rolled steel sheet.

Tolerances: Comply with SDI 117 "Manufacturing Tolerances Standard Steel Doors and Frames."

Fabricate concealed stiffeners, reinforcement, edge channels, louvers, and moldings from either cold- or hot-rolled steel sheet.

Galvanized Steel Doors, Panels, and Frames: For the following locations, fabricate doors, panels, and frames from galvanized steel sheet according to SDI 112. Close top and bottom edges of doors flush as an integral part of door construction or by addition of minimum 0.0635-inch- (1.6-mm-) thick galvanized steel channels, with channel webs placed even with top and bottom edges. Seal joints in top edges of doors against water penetration.

1. At exterior locations.

Exposed Fasteners: Unless otherwise indicated, provide countersunk flat or oval heads for exposed screws and bolts.

Thermal-Rated (Insulating) Assemblies: At exterior locations and elsewhere as shown or scheduled, provide doors fabricated as thermal-insulating door and frame assemblies and tested per ASTM 578 with a U factory of 0.13.

Hardware Preparation: Prepare doors and frames to receive mortised and concealed hardware according to final door hardware schedule and templates provided by hardware supplier. Comply with applicable requirements of SDI 107 and ANSI A115 Series specifications for door and frame preparation for hardware.

1. For concealed overhead door closers, provide space, cutouts, reinforcing, and provisions for fastening in top rail of doors or head of frames, as applicable.

Reinforce doors and frames to receive surface-applied hardware. Drilling and tapping for surface-applied hardware may be done at Project site.

Locate hardware as indicated on Shop Drawings or, if not indicated, according to the Door and Hardware Institute's (DHI) "Recommended Locations for Architectural Hardware for Standard Steel Doors and Frames."

Glazing Stops: Minimum 0.0359-inch- (0.9-mm-) thick steel or 0.040-inch- (1-mm-) thick aluminum.

1. Provide non-removable stops on outside of exterior doors and on secure side of interior doors for glass, louvers, and other panels in doors.
2. Provide screw-applied, removable, glazing beads on inside of glass, louvers, and other panels in doors.

FINISHES, GENERAL

Comply with NAAMM's "Metal Finishes Manual" for recommendations relative to applying and designating finishes.

Comply with SSPC-PA 1, "Paint Application Specification No. 1," for steel sheet finishes.

Apply primers and organic finishes to doors and frames after fabrication.

GALVANIZED STEEL SHEET FINISHES

Surface Preparation: Clean surfaces with non-petroleum solvent so that surfaces are free of oil or other contaminants. After cleaning, apply a conversion coating of the type suited to the organic coating applied over it. Clean welds, mechanical connections, and abraded areas, and apply galvanizing repair paint specified below to comply with ASTM A 780.

1. Galvanizing Repair Paint: High-zinc-dust-content paint for re-galvanizing welds in galvanized steel, with dry film containing not less than 94 percent zinc dust by weight, and complying with DOD-P-21035 or SSPC-Paint 20.

Factory Priming for Field-Painted Finish: Where field painting after installation is indicated, apply air-dried primer specified below immediately after cleaning and pretreatment.

1. Shop Primer: Zinc-dust, zinc-oxide primer paint complying with performance requirements of FS TT-P-641, Type II.

STEEL SHEET FINISHES

Surface Preparation: Solvent-clean surfaces to comply with SSPC-SP 1 to remove dirt, oil, grease, and other contaminants that could impair paint bond. Remove mill scale and rust, if present, from uncoated steel to comply with SSPC-SP 5 (White Metal Blast Cleaning) or SSPC-SP 8 (Pickling).

Pretreatment: Immediately after surface preparation, apply a conversion coating of type suited to organic coating applied over it.

Factory Priming for Field-Painted Finish: Apply shop primer that complies with ANSI A224.1 acceptance criteria, is compatible with finish paint systems indicated, and has capability to provide a sound foundation for field-applied topcoats. Apply primer immediately after surface preparation and pretreatment.

PART 3 – EXECUTION

INSTALLATION

General: Install steel doors, frames, and accessories according to Shop Drawings, manufacturer's data, and as specified.

Placing Frames: Comply with provisions of SDI 105, unless otherwise indicated. Set frames accurately in position, plumbed, aligned, and braced securely until permanent anchors are set. After wall construction is completed, remove temporary braces and spreaders, leaving surfaces smooth and undamaged.

1. Except for frames located in existing concrete, masonry, or gypsum board assembly construction, place frames before constructing enclosing walls and ceilings.
2. In masonry construction, install at least 3 wall anchors per jamb adjacent to hinge location on hinge jamb and at corresponding heights on strike jamb. Acceptable anchors include masonry wire anchors and masonry T-shaped anchors.
3. At existing concrete or masonry construction, install at least 3 completed opening anchors per jamb adjacent to hinge location on hinge jamb and at corresponding heights on strike jamb. Set frames and secure to adjacent construction with bolts and masonry anchorage devices.
4. Install fire-rated frames according to NFPA 80.

Door Installation: Fit hollow-metal doors accurately in frames, within clearances specified in ANSI/SDI 100.

1. Fire-Rated Doors: Install with clearances specified in NFPA 80.
2. Smoke-Control Doors: Comply with NFPA 105.

ADJUSTING AND CLEANING

Prime Coat Touchup: Immediately after erection, sand smooth any rusted or damaged areas of prime coat and apply touchup of compatible air-drying primer.

Protection Removal: Immediately before final inspection, remove protective wrappings from doors and frames.

END OF SECTION 08110

SECTION 08211 - WOOD DOORS

PART 1 – GENERAL

RELATED DOCUMENTS:

Drawings and general provisions of Contract including General and Supplementary Conditions and Division 1 Specification sections apply to work of this section.

SUMMARY

This Section includes the following:

1. Solid core doors with wood veneer faces.
2. Factory finishing of flush wood doors.
3. Louvers for flush wood doors (if scheduled).

SUBMITTALS

General: Submit each item in this Article according to the Conditions of the Contract and Division 1 Specification Sections.

Product data for each type of door, including details of core and edge construction, trim for openings and louvers, and factory-finishing specifications.

Shop drawings indicating location and size of each door, elevation of each kind of door, details of construction, location and extent of hardware blocking, fire ratings, requirements for veneer matching and factory finishing and other pertinent data.

1. For factory-machined doors, indicate dimensions and locations of cutouts for locksets and other cutouts adjacent to light and louver openings.

Samples for initial selection in the form of color charts consisting of actual materials in small sections for the following:

1. Faces of factory-finished doors with transparent finish. Show the full range of colors available for stained finishes.
2. Faces of factory-finished doors with opaque finish. Show the full range of colors available.

Samples for verification in the form and size indicated below:

1. Corner sections of doors approximately 12 inches (300 mm) square with door faces and edgings representing the typical range of color and grain for each species of veneer and solid lumber required. Finish sample with same materials proposed for factory-finished doors.

QUALITY ASSURANCE

Quality Standard: Comply with the following standard:

1. NWWDA Quality Standard: I.S.1-A, "Architectural Wood Flush Doors," of the National Wood Window and Door Association.
2. AWI Quality Standard: "Architectural Woodwork Quality Standards" of the Architectural Woodwork Institute for grade of door, core, construction, finish, and other requirements.

Fire-Rated Wood Doors: Provide wood doors that comply with NFPA 80; are identical in materials and construction to units tested in door and frame assemblies per ASTM E 152; and are labeled and listed by UL, Warnock Hersey, or another testing and inspection agency acceptable to authorities having jurisdiction.

1. Oversized Fire-Rated Wood Doors: For door assemblies exceeding sizes of tested assemblies, provide manufacturer's certificate stating that doors conform to all standard construction requirements of tested and labeled fire-door assemblies except for size.
2. Temperature Rise Rating: At stairwell enclosures, provide doors that have a temperature rise rating of 450 deg F (250 deg C) maximum in 30 minutes of fire exposure.
3. Temperature Rise Rating: At stairwell enclosures, provide doors that have a temperature rise rating of 250 deg F (139 deg C) maximum in 30 minutes of fire exposure.

Single-Source Responsibility: Obtain doors from one source and by a single manufacturer.

DELIVERY, STORAGE, AND HANDLING

Protect doors during transit, storage, and handling to prevent damage, soiling, and deterioration. Comply with requirements of referenced standard and manufacturer's instructions.

1. Comply with Technical Bulletin 420-R for delivery, storage, and handling of doors.

Identify each door with individual opening numbers as designated on shop drawings, using temporary, removable, or concealed markings.

PROJECT CONDITIONS

Conditioning: Do not deliver or install doors until building is enclosed, wet work is complete, and HVAC system is operating and will maintain temperature and relative humidity at occupancy levels during the remainder of the construction period.

WARRANTY

General Warranty: Door manufacturer's warranty specified in this Article shall not deprive the Owner of other rights the Owner may have under other provisions of the Contract Documents and shall be in addition to, and run concurrent with, other warranties made by the Contractor under requirements of the Contract Documents.

Door Manufacturer's Warranty: Submit written agreement on door manufacturer's standard form signed by manufacturer, Installer, and Contractor, agreeing to repair or replace defective doors that have warped (bow, cup, or twist) more than 1/4 inch (6.35 mm) in a 42-by-84-inch (1067-by-2134-mm) section or that show telegraphing of core construction in face veneers exceeding 0.01 inch in a 3-inch (0.25 mm in a 75-mm) span, or do not conform to tolerance limitations of referenced quality standards.

1. Warranty shall also include installation and finishing that may be required due to repair or replacement of defective doors where defect was not apparent prior to hanging.
2. Warranty shall be in effect during the following period of time after date of Substantial Completion.
    a. Solid Core Interior Doors: Life of installation.

PART 1 – PRODUCTS

MANUFACTURERS

Available Manufacturers: Subject to compliance with requirements, manufacturers offering doors that may be incorporated in the Work (No other Manufacturer to be used unless prior approved by addenda)

Manufacturer: Subject to compliance with requirements, provide doors by one of the following: (No other manufacturers accepted unless prior approved by addenda)

1. Solid Core Doors:
    a. Algoma Hardwoods, Inc.
    b. Eggers Industries, Architectural Door Division.
    c. Chappell Door Company

INTERIOR FLUSH WOOD DOORS

Solid Core Doors for Transparent Finish: Comply with the following requirements:

1. Faces: **Plain Sliced White Birch**
2. Grade: Premium.
3. Construction: 5 ply
4. Core: Particleboard Core to meet or exceed ANSI/A208.1 for 1-LD-1 or 1-LD-2 door core.
5. Bonding: Stiles and rails bonded to core, then entire unit abrasive planed before veneering.

Fire-Rated Solid Core Doors: Comply with the following requirements:

1. Faces and Grade: Provide faces and grade to match non-fire-rated doors in same area of building, unless otherwise indicated.
2. Construction: Manufacturer's standard core construction as required to provide fire-resistance rating indicated.
3. Edge Construction: Provide manufacturer's standard laminated-edge construction for improved screw-holding capability and split resistance compatible hardwood
4. Pairs: Furnish formed-steel edges and astragals for pairs of fire-rated doors, unless otherwise indicated.
5. Pairs: Provide fire-rated pairs with fire-retardant stiles that are labeled and listed for kinds of applications indicated without formed-steel edges and astragals.

FABRICATION

Fabricate flush wood doors to comply with following requirements:

1. In sizes indicated for job-site fitting.
2. Factory fit doors to suit frame-opening sizes indicated, with the following uniform clearances and bevels:
   a. Comply with clearance requirements of referenced quality standard for fitting. Comply with requirements of NFPA 80 for fire-resistance-rated doors.
3. Factory machine doors for hardware that is not surface applied. Locate hardware to comply with DHI-WDHS-3. Comply with final hardware schedules, door frame shop drawings, DHI A115-W series standards, and hardware templates.
   a. Coordinate measurements of hardware mortises in metal frames to verify dimensions and alignment before proceeding with factory machining.
   b. Metal Astragals: Pre-machine astragals and formed-steel edges for hardware for pairs of fire-rated doors.

Openings: Cut and trim openings through doors to comply with applicable requirements of referenced standards for kind(s) of door(s) required.

1. Light Openings: Trim openings with moldings of material and profile indicated.
2. Louvers: Factory install louvers in prepared openings.

SHOP PRIMING

Transparent Finish: Shop-seal faces and edges of doors for transparent finish with stain (if required), other required pretreatments, and first coat of finish as specified.

FACTORY FINISHING

General: Comply with referenced quality standard's requirements for factory finishing.

Finish wood doors at factory.

Transparent Finish: Comply with requirements indicated for grade, finish system, staining effect, and sheen.

1. Grade: Premium.
2. Finish: AWI System TR-4 or better
3. Color as chosen from manufacturer line of Stain Colors

PART 2 – EXECUTION

EXAMINATION

Examine installed door frames prior to hanging door:

1. Verify that frames comply with indicated requirements for type, size, location, and swing characteristics and have been installed with plumb jambs and level heads.
2. Reject doors with defects.

Do not proceed with installation until unsatisfactory conditions have been corrected.

INSTALLATION

Hardware: For installation see Division 8 Section "Door Hardware."

Manufacturer's Instructions: Install wood doors to comply with manufacturer's instructions and referenced quality standard and as indicated.

1. Install fire-rated doors in corresponding fire-rated frames according to requirements of NFPA 80.

Job-Fit Doors: Align and fit doors in frames with uniform clearances and bevels as indicated below; do not trim stiles and rails in excess of limits set by manufacturer or permitted with fire-rated doors. Machine doors for hardware. Seal cut surfaces after fitting and machining.

1. Fitting Clearances for Non-Fire-Rated Doors: Provide 1/8 inch (3.2 mm) at jambs and heads, 1/16 inch (1.6 mm) per leaf at meeting stiles for pairs of doors, and 1/8 inch (3.2 mm) from bottom of door to top of decorative floor finish or covering. Where threshold is shown or scheduled, provide 1/4-inch (6.4-mm) clearance from bottom of door to top of threshold.
2. Fitting Clearances for Fire-Rated Doors: Comply with NFPA 80.
3. Bevel non-fire-rated doors 1/8 inch in 2 inches (3-1/2 degrees) at lock and hinge edges.
4. Bevel fire-rated doors 1/8 inch in 2 inches (3-1/2 degrees) on lock edge; trim stiles and rails only to extent permitted by labeling agency.

Factory-Fitted Doors: Align in frames for uniform clearance at each edge.

Factory-Finished Doors: Restore finish after installation, if fitting or machining is required at the job site.

ADJUSTING AND PROTECTION

Operation: Re-hang or replace doors that do not swing or operate freely.

Finished Doors: Refinish or replace doors damaged during installation.

Protect doors as recommended by door manufacturer to ensure that wood doors will be without damage or deterioration at the time of Substantial Completion.

END OF SECTION 08211

SECTION 08410 - ALUMINUM ENTRANCES AND STOREFRONTS

PART 1 – GENERAL

RELATED DOCUMENTS:

Drawings and general provisions of Contract including General and Supplementary Conditions and Division 1 Specification sections apply to work of this section.

DESCRIPTION OF WORK:

Extent of aluminum entrances and storefronts is indicated on drawings and schedules, match existing finishes.

Types of aluminum entrances and storefronts required include the following:

1. Frames for exterior entrances
2. Storefront type framing system for exterior applications.
3. Storefront type framing system for exterior fixed window applications.
4. Storefront type framing system for interior applications.
5. Exterior Storefront Doors.

Glazing: Refer to “Glass and Glazing” section of Division 8 for glazing requirements for aluminum entrances and storefronts specified herein to be factory pre-glazed.

SYSTEM PERFORMANCES:

General: Provide exterior entrance and storefront assemblies that have been designed and fabricated to comply with requirements for system performance characteristics listed below as demonstrated by testing manufacturer’s corresponding stock systems according to test methods designated. System shall be of design styles indicated. System components and accessories shall be from the same manufacturer, to the maximum extent possible.

Thermal Movement: Allow for expansion and contraction resulting from ambient temperature range of 120 degree F.

Wind Loading: Provide capacity to withstand loading indicated below, tested per ASTM E 330.

1. Uniform pressure of 20 psf inward and 20 psf outward.

Transmission Characteristics of Fixed Framing: Comply with requirements indicated below for transmission characteristics and test methods.

1. Air and Water Leakages: Air infiltration of not more than 0.06 CFM per sq. ft. of fixed area per ASTM E 283 and no uncontrolled water penetration per ASTM E 331 at pressure differential of 6.24 psf (excluding operable door edges).
2. Condensation Resistance: Not less than 51 CRF per AAMA 1502.7.
3. Thermal Transmittance: U-value of not more than 0.65 Btu/(hr x sf x degree F) per AAMA 1503.1.

Transmission Characteristics of Entrances: Provide entrance doors with jamb and head frames which comply with requirements indicated below for transmission characteristics and test methods.

1. Air Leakage: Air infiltration per linear foot of perimeter crack of not more than 0.50 CFM for single doors and 1.0 CFM for pairs of doors per ASTM E 283 at pressure differential of 1.567 psf.
2. Condensation Resistance: Not less than 48 CRF per AAMA 1502.7.
3. Thermal Transmittance: U-value of not more than 0.93 Btu/(hr x sf x degree F) per AAMA 1503.1.

QUALITY ASSURANCE:

Drawings: Plans, elevations and details show spacings of members as well as profile and similar dimensional requirements of aluminum entrances and storefront work. Minor deviations will be accepted in order to utilize manufacturer's standard products when, in Architect's sole judgment, such deviations do not materially detract from design concept or intended performances.

SUBMITTALS:

Product Data: Submit manufacturer's specifications, standard details, and installation recommendations for components of aluminum entrances and storefronts required for project, including test reports certifying that products have been tested and comply with performance requirements.

Samples: Submit samples of each type and color of aluminum finish on 12" long sections of extrusions or formed shapes and on 6" square sheets. Where normal color and texture variations are to be expected, include 2 or more units in each set of samples showing limits of such variations.

PART 2 – PRODUCTS

Aluminum Doors, Frames and Storefronts:

Manufacturers: The following manufacturers' products have been used to establish minimum standards for materials, workmanship and function:

Vistawall Architectural Products
Amarlite Architectural Products
PPG Industries, Inc
Tubelite Div., Architectural Products
Coral Industries
YKK AP

Equal products of other manufacturers may be used in the work, provided such products have been approved by the Architect, not less than five (5) days prior to scheduled bid opening.

MATERIALS AND ACCESSORIES:

Aluminum Members: Alloy and temper recommended by manufacturer for strength, corrosion resistance, and application of required finish; ASTM B 221 for extrusion, ASTM B 209 for sheet/plate.

Fasteners: Aluminum, non-magnetic stainless steel, or other materials warranted by manufacturer to be noncorrosive and compatible with aluminum components.

1. Do not use exposed fasteners except where unavoidable for application of hardware. Match finish of adjoining metal.
2. Provide Phillips flat-head machine screws for exposed fasteners.

Concealed Flashing: Dead-soft stainless steel, 26 gauge minimum, or extruded aluminum, 0.062" minimum, of an alloy and type selected by manufacturer for compatibility with other components.

Brackets and Reinforcements: Manufacturer's high-strength aluminum units where feasible; otherwise, non-magnetic stainless steel or hot-dip galvanized steel complying with ASTM A 386.

Concrete/Masonry Inserts: Cast-iron, malleable iron, or hot-dip galvanized steel complying with ASTM A 386.

Bituminous Coatings: Cold-applied asphalt mastic complying with SSPC-PS 12, compounded for 30-mil thickness per coat.

Compression Weatherstripping: Manufacturer's standard replace- able stripping of either molded neoprene gaskets complying with ASTM D 2000 or molded PVC gaskets complying with ASTM D 2287.

Sliding Weatherstripping: Manufacturer's standard replaceable stripping of wool, polypropylene, or nylon woven pile, with nylon fabric or aluminum strip backing, complying with AAMA 701.2.

Glass and Glazing Materials: Provide glass and glazing materials which comply with requirements of "Glass and Glazing" section of these specifications.

HARDWARE:

General: Hardware shall comply with requirements of the "Americans with Disabilities Act". Refer to hardware section of Division 8 for requirements for hardware items other than those indicated herein to be provided by manufacturer of aluminum entrances.

Hardware for Doors: Provide door manufacturer's standard heavy-duty hardware units as indicated, scheduled, or required for operation of each door, including the following items of sizes, number, and type recommended by manufacturer for service required, finished to match door, unless otherwise indicated.

1. Push/Pull Handles: CO-9 design, by Kawneer. Finish as per the Door Schedule.
2. All other hardware shall be as per Section 08700, Finish Hardware.

FRAMING:

Types:

1. Storefront type framing system for insulated exterior applications: Framing system shall be equal to TriFab II 451 (standard frame depth – see drawings for locations), by Kawneer. At storefront windows provide surface applied muttins as indicated in the drawings.
2. Storefront type framing system for interior applications: Framing system shall be equal to TriFab II 450, by Kawneer.
3. Mutins: Shall be ¾" x ¾" aluminum tube applied to the aluminum storefront system on the outside pane of glass at the exterior windows where indicated.

General:

Support Members: Extruded aluminum alloy 6063-T6 or 6061-T6 complying with ASTM B-221.

Flashing/Closures: Formed aluminum 5005-H34 alloy, min. thickness .040", complying with ASTM B-209.

Cap System: Manufacturer's standard cap glazing system consisting of rectangular (rafter) and beveled (horizontal) glazing gaps which will secure all sides of each light of glass against negative and positive loads.

Fasteners: A300 stainless steel.

Sealant: Silicone (FS TT-S-0015 43A and TT-S-0023 o.c.)

FABRICATION:

General:

Sizes and Profiles: Required sizes for door and frame units, including profile requirements, are indicated on drawings. Any variable dimensions are indicated, together with maximum and minimum dimensions required to achieve design requirements and coordination with other work.

Prefabrication: To greatest extent possible, complete fabrication, assembly, finishing, hardware application, and other work before shipment to project site. Disassemble components only as necessary for shipment and installation.

1. Preglaze door and frame units to greatest extent possible, in coordination with installation and hardware requirements.
2. Do not drill and tap for surface-mounted hardware items until time of installation at project site.
3. Perform fabrication operations, including cutting, fitting, forming, drilling and grinding of metal work in manner which prevents damage to exposed finish surfaces. For hardware, perform these operations prior to application of finishes.

Welding: Comply with AWS recommendations to avoid discoloration; grind exposed welds smooth and restore mechanical finish.

Reinforcing: Install reinforcing as necessary for performance requirements; separate dissimilar metals with bituminous paint or other separator which will prevent corrosion.

Continuity: Maintain accurate relation of planes and angles, with hairline fit of contacting members.

Fasteners: Conceal fasteners wherever possible.

Weatherstripping: For exterior doors, provide compression weatherstripping against fixed stops; at other edges, provide sliding weatherstripping retained in adjustable strip mortised into door edge.

1. Provide EPDM/vinyl blade gasket weatherstripping in bottom door rail, adjustable for contact with threshold.

STOREFRONT FRAMING SYSTEM:

General: Provide inside-outside matched center glazed system with provisions for glass replacement. Shop-fabricate and preassemble frame components where possible.

ALUMINUM DOOR FRAMES:

Fabricate tubular and channel frame assemblies, as indicated, with either welded or mechanical joints in accordance with manufacturer's standards, reinforced as necessary to support required loads.

STILE-AND-RAIL TYPE ALUMINUM DOORS (STANDARD ENTRANCES):

Frame: Provide tubular frame members, fabricated with mechanical joints using heavy inserted reinforcing plates and concealed tie-rods or j-bolts, or fabricate with structurally welded joints, at manufacturer's option.

Design: Provide doors equal to Model 500 by Kawneer, thick stile design with 8" high horizontal croosbar.

Baked Enamel Finish: Premium color selection equal to Kawneer #22 Stock Fluropon Architectural Coating (Hylar 5000 or Kynar 500), factory applied and oven baked for a topcoat thickness of 1.0 - 1.3 mils. Color to be selected from manufactures standards by Architect.

Glazing: Fabricate doors to facilitate replacement of glass or panels, without disassembly of door stiles and rails. Provide snap-on extruded aluminum glazing stops, with exterior stops anchored for non-removal.

PART 3 – EXECUTION

PREPARATION:

Field Measurement: Wherever possible, take field measurements prior to preparation of shop drawings and fabrication, to ensure proper fitting of work.

INSTALLATION:

Comply with manufacturer's instructions and recommendations for installation of aluminum entrances.

Set units plumb, level, and true to line, without warp or rack of framing members, doors, or panels. Anchor securely in place, separating aluminum and other corrodible metal surfaces from sources of corrosion of electrolytic action at points of contact with other materials.

Drill and tap frames and apply surface-mounted hardware items, complying with hardware manufacturer's instructions and template requirements. Use concealed fasteners wherever possible.

Set sill members and other members in bed of sealant as indicated, or with joint fillers or gaskets as indicated to provide weathertight construction. Comply with requirements of Division 7 for sealants, fillers, and gaskets.

Refer to "Glass and Glazing" section of Division 8 for installation of glass and spandrel panels indicated to be glazed into framing, and not preglazed by manufacturer.

ADJUST AND CLEAN:

Adjust operating hardware to function properly, without binding, and to prevent tight fit at contact points and weatherstripping.

Clean completed systems, inside and out, promptly after erection and installation of glass and sealants. Remove excess glazing and joint sealants, dirt, and other substances from aluminum surfaces.

Institute protective measures and other precautions required to assure that aluminum entrances and storefronts will be without damage or deterioration, other than normal weathering, at time of acceptance.

END OF SECTION 08410

SECTION 08710 – FINISH HARDWARE

PART 1 – GENERAL

RELATED DOCUMENTS

Drawings and general provisions of Contract including General and Supplementary Conditions and Division 1 Specification Sections apply to this Section.

SUMMARY

This Section includes items known commercially as finish or door hardware that are required for swing, sliding, and folding doors, except special types of unique hardware specified in the same sections as the doors and door frames on which they are installed.

This Section includes the following:

1. Hinges.
2. Pivots.
3. Spring hinges.
4. Key control system.
5. Lock cylinders and keys.
6. Lock and latch sets.
7. Bolts.
8. Exit devices.
9. Push/pull units.
10. Closers.
11. Overhead holders.
12. Miscellaneous door control devices.
13. Door trim units.
14. Protection plates.
15. Weather-stripping for exterior doors.
16. Sound stripping for interior doors.
17. Automatic drop seals (door bottoms).
18. Astragals or meeting seals on pairs of doors.
19. Thresholds.

Related Sections: The following Sections contain requirements that relate to this Section:

1. Division 8 Section "Standard Steel Doors and Frames" for silencers integral with hollow metal frames.
2. Division 8 Section "Flush Wood Doors" for factory pre-fitting and factory pre-machining of doors for door hardware.

3. Division 8 Section "Aluminum Entrances and Storefronts" for aluminum entrance door hardware, except cylinders.

Door hardware supplier's responsibilities shall be as follows:

1. Submittals: Submit through Contractor required product data, final hardware schedule; separate keying schedule, and samples as specified in this Section, unless otherwise indicated.
2. Construction Schedule: Inform Contractor promptly of estimated times and dates that will be required to process submittals, to furnish templates, to deliver hardware, and to perform other work associated with furnishing door hardware for purposes of including this data in construction schedule. Comply with this schedule.
3. Coordination and Templates: Assist Contractor as required to coordinate hardware with other work in respect to both fabrication and installation. Furnish Contractor with templates and deliver hardware to proper locations.
4. Product Handling: Package, identify, deliver, and inventory door hardware specified in this Section.
5. Discrepancies: Based on requirements indicated in Contract Documents in effect at time of door hardware selection, furnish types, finishes, and quantities of door hardware, including fasteners, and Owner's maintenance tools required to comply with specified requirements and as needed to install and maintain hardware. Furnish or replace any items of door hardware resulting from shortages and incorrect items at no cost to the Owner or Contractor. Obtain signed receipts from Contractor for all delivered materials.

Contractor's responsibilities shall be as follows:

1. Submittals: Coordinate and process submittals for door hardware in same manner as submittals for other work.
2. Construction Schedule: Cooperate with door hardware supplier in establishing scheduled dates for submittals and delivery of templates and door hardware. Incorporate in construction schedule the times and dates related to furnishing hardware by door hardware supplier.
3. Coordination: Coordinate door hardware with other Work. Furnish hardware supplier or manufacturer with shop drawings of other work where required or requested. Verify completeness and suitability of hardware with supplier.
4. Product Handling: Provide secure lock-up for hardware delivered to the site. Inventory hardware jointly with representative of hardware supplier and issue signed receipts for all delivered materials.

5. Installation Information: The general types and approximate quantities of hardware required for this Project are indicated at the end of this Section in order to establish Contractor's costs for installation and other work not included in allowance.
6. No adjustments in Contract sum will be made for costs other than those covered by the allowances for subsequent increases or decreases in quantity of one or more hardware types that do not exceed 5 percent.

SUBMITTALS

General: Submit the following in accordance with Conditions of Contract and Division 1 Specification sections.

Product data including manufacturers' technical product data for each item of door hardware, installation instructions, maintenance of operating parts and finish, and other information necessary to show compliance with requirements.

Final hardware schedule coordinated with doors, frames, and related work to ensure proper size, thickness, hand, function, and finish of door hardware.

1. Upon return of the reviewed finish hardware schedule, arrange for a meeting with the Owner and Architect to established Final Keying Schedule and submitted to the Architect and Owner for Final Approval. The Master key system shall be a factory "**serialized"** registered system to assure the propriety of the codes and avoid duplication of cross-keying. Supplier must be Factory Authorized Key Cutter.

QUALITY ASSURANCE

Single Source Responsibility: Obtain each type of hardware (latch and lock sets, hinges, closers, etc.) from a single manufacturer.

Supplier Qualifications: A recognized architectural door hardware supplier, with warehousing facilities in the Project's vicinity, that has a record of successful in-service performance for a minimum of 15 years, for supplying door hardware similar in quantity, type, and quality to that indicated for this Project and that employs an experienced **"** **Certified** "architectural hardware consultant (AHC)" and current with DHI Continuing Education Points Program (CEP) all submittals will require certification seal of AHC " who is available to Owner, Architect, and Contractor, at reasonable times during the course of the Work, for consultation.

Supplier must be a Factory Authorized Distributor all Keys and Cores furnished for the Project.

1. Require supplier to meet with Owner to finalize keying requirements and to obtain final instructions in writing.

Fire-Rated Openings: Provide door hardware for fire-rated openings that complies with NFPA Standard No. 80 and requirements of authorities having jurisdiction. Provide only items of door hardware that are listed and are identical to products tested by UL, Warnock Hersey, FM, or other testing and inspecting organization acceptable to authorities having jurisdiction for use on types and sizes of doors indicated in compliance with requirements of fire-rated door and door frame labels.

PRODUCT HANDLING

Tag each item or package separately with identification related to final hardware schedule, and include basic installation instructions with each item or package.

Packaging of door hardware is responsibility of supplier. As material is received by hardware supplier from various manufacturers, sort and repackage in containers clearly marked with appropriate hardware set number to match set numbers of approved hardware schedule. Two or more identical sets may be packed in same container.

Inventory door hardware jointly with representatives of hardware supplier and hardware installer until each is satisfied that count is correct.

Deliver individually packaged door hardware items promptly to place of installation (shop or Project site).

Provide secure lock-up for door hardware delivered to the Project, but not yet installed. Control handling and installation of hardware items that are not immediately replaceable so that completion of the Work will not be delayed by hardware losses both before and after installation.

MAINTENANCE

Maintenance Tools and Instructions: Furnish a complete set of specialized tools and maintenance instructions as needed for Owner's continued adjustment, maintenance, and removal and replacement of door hardware.

PART 2 – PRODUCTS

Hinges & Pivots: Hager, Stanley, Lawrence, Bommer

1. Provide only template produced units
2. Provide Phillips flat-head or machine screws for installation of units, except furnish Phillips flat-head wood screws for installation of units in to wood. Finish screw heads to match surface of hinges or pivots.
3. Hinge pins, except as noted, are to be provided as follows:
   Steel Hinges: Steel pins
   Non-ferrous Hinges: Stainless steel pins
   Exterior Doors: Use Non Removable Pins
   Interior Doors: Non-rising pins
   Electric Hinges: Non-removable pins
4. Tips shall be flat button and matching plug, finished to match leaves.
5. Provide number of hinges indicated but not less than three (3) hinges for door leaf of 90" or less in height and one additional hinge for each 30" of additional height.
6. Provide ball bearing hinges of the type and weight suggested by the hinge manufacturer for each type of door application.

Lock Cylinders & Keying: All Permanent interchangeable core to be furnished by owner.

See hardware sets for temporary interchangeable cores to be furnished by hardware supplier under this section 08710

Locksets & Latch-sets: Dorma –equal by Stanley/Best; Schlage

1. Locksets and latch-sets of other manufacturers must conform to the requirements of Subparagraphs 2 and, and be approved by the Architect.
2. Mortise Type:
   a. Locksets and latch-sets must be heavy duty cylindrical type with 2 ¾ in. backset, or greater as specified, with a 3/4 inch throw latch-bolt.
   b. Locksets and latch-sets must conform to ANSI A156.2 Series 1000, Grade 1, and Be UL Listed.
   c. Trim is to be Dorma LRH design and finish listed in hardware sets

Exit Devices: Dorma, Precision Hardware, Von Duprin

1. All exit devices to be of one manufacturer and provided in same finish and lever design as Locksets.
2. Provide sex nuts and bolts for attachment of surface applied items to doors.

3. Devices shall be UL listed. Devices for fire rated openings shall bear factory installed UL markings that indicate approval for fire rated openings.
4. All exit devices shall be touch-bar type design and Grooved aluminum extrusions are not allowed.
5. All exit devices shall comply with ANSI A156.3, Grade 1.

Closers: Stanley/Ryobi; Dorma, or LCN

1. Size of units: Except as otherwise specifically indicated, comply with the manufacturer's recommendations for size of door control unit, depending upon size of door, exposure to weather and anticipated frequency of use.
   a. Where parallel arms are indicated for closers, provide closer unit one size larger than recommended for use with standard arms.
2. Where manual closers are indicated for doors required to be accessible to the physically handicapped, provide adjustable units, ANSI opening force and delayed action closing.
3. Provide concealed closers that are fully concealed when doors are closed. Concealed closers are to have full rack and pinion hydraulic operation with separate controls for closing and latching speeds. Closer to have high strength cast cylinder and all temperature fluid.
4. Provide manual closers that are certified to exceed one million (1,000,000) full load operating cycles by a recognized independent testing laboratory. Closers are to be fully hydraulic, rack and pinion action with high strength cast aluminum cylinders and one piece forged steel pistons. Hydraulic fluid to be of a type requiring no seasonal adjustments for temperature. Hydraulic regulation to be controlled by tamper-proof, non-critical screw values, adjustable with a hex by tamper-proof, non-critical screw valves, adjustable with a hex wrench. Separate adjustments for back check, general speed, and latch speed. Where detailed on double lever arm closers, provide a delayed action feature to delay closing up to one minute for maximum opening to approximately 75. Back check shall be properly located for protection of the door, frame and applied hardware.
5. Use of closers with built-in spring or cushion stops will be allowed in lieu of overhead stops.
6. All door closers shall comply with ANSI A156.4 Grade 1 and meet the standards of ANSI A117.1 for barrier-free accessibility.

Overhead Stops and Holders: Dorma or Equal by ABH

Push/Pulls, Protection Plates: Hager, Rockwood, Quality, Burns, Trimco

1. Provide manufacturers standard exposed fasteners for installation, through bolted for matched pairs, but not of single units.
2. Provide 16 gauge minimum thickness for plates.
3. Bevel protection plates on four (4) sides.

Threshold, Weather-stripping & Gasketing: Zero, Hager, National Guard, Reese

1. Provide continuous weather-stripping at each edge of every exterior door leaf, except as otherwise indicated.
2. Provide type, size and profile shown as scheduled.
3. Provide non-corrosive fasteners as recommended by manufacturer for application indicated. Do not specify adhesive backed weather-strip or gasket material.
4. Where replaceable seal strips are scheduled, provide only those units where resilient or flexible seal strip is easily replaceable from stocks maintained by manufacturer.
5. Proved standard metal threshold unit of type, size and profile shown as scheduled.

FINISHES

Provide as indicated in the hardware schedule and as previously noted herein.

PART 3 – EXECUTION

INSTALLATION

Install each hardware item in compliance with manufacturer's instructions and recommendations. Where cutting and fitting is required to install hardware onto or into surfaces that are later to be painted of finished in another way, install each item completely and then remove and store in a secure place during the finish application. After completion of the finishes, reinstall each item. Do not install surface mounted items until finishes have been completed on the substrate.

Conform to ANSI A117.1 for positioning requirements for the handicapped.

PROTECTION & CLEANING

After installation, clean metal surfaces on both interior and exterior of all mortar, paint and other contaminants. After cleaning, protect work against damage.

FINAL ADJUSTMENT

Whenever hardware is installed more than one month prior to occupancy or acceptance, return during the week prior to acceptance or occupancy and make a final inspection and adjustment of all hardware items in such space or area.

SCHEDULE

HARDWARE SET 01
Door # 100A, 100B, 102A

Qty	Type	Description	Finish
2	Hinge, A31031G	780-224 HD X 95" CONCEALED LEAF	628
1	Rim Cyl Hsg	87 R 10 00 LESS CORE	626
1	Const Core	77 XX TMP CONST CORE	
1	Conc V-rod Exit	9100 B NO TRIM RHR, ALD	630
1	Conc V-rod Exit	9100 B NO TRIM LHR, ALD	630
2	Closer	8916 DS8 TPK89 SN1 ALUM	689
2	Drop Plate	DP 89 DROP PLATE	689
2	HD Spacer	BSHD SPACER	
2	Offset Pull	12L - 12" CTC X TB	630
1	* by others *	PERIMETER SEAL BY OTHERS	
1	* by others *	THRESHOLD BY OTHERS	
1	* by others *	SWEEP STRIP BY OTHERS	

HARDWARE SET 01.1
Door # 102D, 102E, 103A

Qty	Type	Description	Finish
2	Hinge, A31031G	780-224 HD X 95" CONCEALED LEAF	628
1	Rim Cyl Hsg	87 R 10 00 LESS CORE	626
1	Const Core	77 XX TMP CONST CORE	
1	Conc V-rod Exit	9100 A NO TRIM RHR, ALD	630
1	Conc V-rod Exit	9100 A NO TRIM LHR, ALD	630
2	Closer	8916 DS8 TPK89 SN1 ALUM	689
2	Drop Plate	DP 89 DROP PLATE	689
2	HD Spacer	BSHD SPACER	
2	Offset Pull	12L - 12" CTC X TB	630
1	* by others *	PERIMETER SEAL BY OTHERS	
1	* by others *	THRESHOLD BY OTHERS	
1	* by others *	SWEEP STRIP BY OTHERS	

Hardware Set # 01.1 Notes: OPENING # 103A SHALL BE A SINGLE ACTING DOOR NOT DOUBLE ACTING DOOR AS SHOWN ON DRAWINGS – (PANIC DEVICE)

HARDWARE SET 02
Door # 103B, 103C

Qty	Type	Description	Finish
1	Mort Cyl Hsg	97 J 01 00 138 ADAMS RITE CAM LESS CORE	626
1	Const Core	77 XX TMP CONST CORE	
1	T/Turn Cyl	THUMBTURN CYL 1-1/8"L (28.575 MM)	626
1	Deadbolt	MS1851S-410-628 RADIUS FRONT	628
2	Floor Closer	BTS 80 A (ALUM DOOR)	626
1	Flushbolt	282D - 12" UL US26D, L04251	626
1	Flushbolt	282D X 282R - 25" UL US26D, L04251	626
2	Offset Pull Set	SET # 22L - 12" CTC X BTB	630
1	* by others *	PERIMETER SEAL BY OTHERS	
1	* by others *	THRESHOLD BY OTHERS	
1	* by others *	SWEEP STRIP BY OTHERS	

HARDWARE SET 03
Door # 104A, 104B

Qty	Type	Description	Finish
1	Hinge, A31031G	780-224 HD X 95" CONCEALED LEAF	628
1	Mort Cyl Hsg	97 J 01 00 138 ADAMS RITE CAM LESS CORE	626
1	Const Core	77 XX TMP CONST CORE	
1	T/Turn Cyl	THUMBTURN CYL 1-1/8"L (28.575 MM)	626
1	Deadbolt	MS1850S-410-628	628
1	Closer	8916 DS8 TPK89 SN1 ALUM	689
1	Drop Plate	DP 89 DROP PLATE	689
1	HD Spacer	BSHD SPACER	
1	Offset Pull Set	SET # 22L - 12" CTC X BTB	630

Hardware Set # 03 Notes: ALL OTHER HDWE BY DOOR SUPPLIER

HARDWARE SET 04
Door # 106

Qty	Type	Description	Finish
1	Const Core	77 XX TMP CONST CORE	
1	Class D-blt	DB 863 J (CLASSRM) LESS CORE	626
1	Floor Closer	BTS 80 B (WD, HM DOOR)	626
2	Kick Plate	190 S 16 X 34 .050"	630
2	Floor Stop	241 F US26D, L02141	626
1	Offset Pull Set	SET # 22L - 12" CTC X BTB	630

HARDWARE SET 05
Door # 107

Qty	Type	Description	Finish
6	Hinge A8112	BB1279 4.5 X 4.5 NRP US26D	652
1	Const Core	77 XX TMP CONST CORE	
1	Storerm F07	ML 9080 J LRH US32D	630
2	Closer C020217414	ARP COV SN1 TPK86 PA ARM	689
1	Floor Stop	241 F US26D, L02141	626
1	Wall Stop	236 W US32D (CONCAVE TYPE), L02251	630
2	Flushbolt	282D - 12" UL US26D, L04251	626
1	Dust Proof Stk	280X WS RP US26D, L04021	626
2	Silencer	307 D METAL FRAME, L03011	GREY

HARDWARE SET 06
Door # 108A

Qty	Type	Description	Finish
3	Hinge A5112	BB1191 4.5 X 4.5 NRP US32D	630
1	Const Core	77 XX TMP CONST CORE	
1	Storerm F07	ML 9080 J LRH US32D	630
1	Closer	8916 DS8 TPK89 SN1 ALUM	689
1	Sweep	750 SAN - 36"	628
1	W/Strip	891 SAV - 17' (1@36", 2@84"), R3Y164	628
1	T/Hold, J32130	412 SA 36" X WS, J32130	628

HARDWARE SET 07
Door # 108B, 110

Qty	Type	Description	Finish
3	Hinge A8112	BB1279 4.5 X 4.5 US26D	652
1	Const Core	77 XX TMP CONST CORE	
1	Storerm F07	ML 9080 J LRH US32D	630
1	Closer C020118916	AF89 TPK89 SN1 REG ARM LESS PA	689
1	Wall Stop	236 W US32D (CONCAVE TYPE), L02251	630
3	Silencer	307 D METAL FRAME, L03011	GREY

HARDWARE SET 08
Door # 109, 111

Qty	Type	Description	Finish
3	Hinge A8111	BB1168 4.5 X 4.5 US26D	652
1	Closer C020118916	AF89 TPK89 SN1 REG ARM LESS PA	689
1	Kick Plate	190 S 8 X 34 .050" US32D, J102	630
1	Push Plate	30 S 8 X 16 .050" 630	
1	Wall Stop	236 W US32D (CONCAVE TYPE), L02251	630
1	Pull Plate	33 E 4 X 16 US32D, J405	630
1	Mop Plate	190 S 6 X 35 .050"	630
3	Silencer	307 D METAL FRAME, L03011	GREY

HARDWARE SET 09
Door # 112, 113

Qty	Type	Description	Finish
3	Hinge A5112	BB1191 4.5 X 4.5 NRP US32D	630
1	Const Core	77 XX TMP CONST CORE	
1	Corr F13	M9956 J LRH X US32D	630
1	Closer	8916 DS8 TPK89 SN1 ALUM	689
1	Kick Plate	190 S 8 X 34 .050" US32D, J102	630
1	Sweep	750 SAN - 36"	628
1	W/Strip	891 SAV - 17' (1@36", 2@84"), R3Y164	628
1	T/Hold, J32130	412 SA 36" X WS, J32130	628

HARDWARE SET 98
Door # 102B, 102C

Hardware Set # 98 Notes: NO HARDWARE REQUIRED --FIX PANEL

HARDWARE SET 99

Door #

Qty	Type	Description	Finish
3	Key	CONSTRUCTION MASTER KEY45101	
1	Key	CONSTRUCTION CONTROL KEY 45101	
1	Key Cabinet	201-8030 X (03) SAND	Sand

Hardware Set # 99 Notes: ALL PERMANENT CORES AND KEYING BY OWNER

END OF SECTION 08710

SECTION 08800 - GLASS AND GLAZING

PART 1 – GENERAL

RELATED DOCUMENTS:

Drawings and general provisions of Contract including General and Supplementary Conditions and Division 1 Specification sections apply to work of this section.

DESCRIPTION OF WORK:

Definitions: "Glass" includes both primary and fabricated glass products as described in FGMA "Glazing Manual". "Glazing" includes glass installation and materials used to install glass.

Extent of glass and glazing work is indicated on drawings and schedules.

Types of work in this section include glass and glazing for:

1. Interior wood doors.
2. Interior and exterior storefront systems and windows.
3. Mirrors.

SYSTEM PERFORMANCES:

Provide glass and glazing that has been produced, fabricated and installed to withstand normal temperature changes, wind loading, impact loading (where applicable), without failure including loss or breakage of glass, failure of sealants or gaskets to remain watertight and airtight, deterioration of glass and glazing materials and other defects in the work.

QUALITY ASSURANCE:

Glazing Standards: Comply with recommendations of Flat Glass Marketing Association (FGMA) "Glazing Manual" and "Sealant Manual" except where more stringent requirements are indicated. Refer to those publications for definitions of glass and glazing terms not otherwise defined in this section or other referenced standards.

Safety Glazing Standard: Where safety glass is indicated or required by authorities having jurisdiction, provide type or products indicated which comply with ANS Z97.1 and testing requirements of 16 CRF Part 1201 for category II materials.

Single Source Responsibility: Provide materials obtained from one source for each type of glass and glazing product indicated.

SUBMITTALS:

Product Data: Submit manufacturer's technical data for each glazing material and fabricated glass product required, including installation and maintenance instructions.

Samples: Submit for verification purposes, 12" square samples of each type of glass indicated except for clear single pane units, and 12" long samples of each color required (except black) for each type of sealant or gasket exposed to view. Install sealant or gasket sample between two strips of materials representative of adjoining framing system in color.

Certificates: Submit certificates from respective manufacturers attesting that glass and glazing materials furnished for project comply with requirements.

DELIVERY, STORAGE AND HANDLING:

Protect glass and glazing materials during delivery, storage and handling to comply with manufacturer's directions and as required to prevent edge damage to glass, and damage to glass and glazing materials form effects of moisture including condensation, of temperature changes, of direct exposure to sun, and from other causes.

PROJECT CONDITIONS:

Environmental Conditions: Do not proceed with glazing when ambient and substrate temperature conditions are outside the limits permitted by glazing material manufacturer or when joint substrates are wet due to rain, frost, condensation or other causes. Install glazing sealants only when temperatures are in middle third of manufacturer's recommended installation temperature range.

PART 2 – PRODUCTS

Manufacturers: The following manufacturers' products have been used to establish minimum standards for materials, workmanship and function:

Manufacturers of Clear Float Glass:
Advanced Coating Technology, Inc., Franklin, Inc.
Ford Motor Co., Glass Div., Detroit, Mi.
Guardian Industries Corp., Carleton, Mi.
Libbey-Owens-Ford Co.
PPG Industries, Inc., Atlanta, Ga.

Manufacturers of Figured/Pattern Glass:
AFG Industries, Inc.
Guardian Industries Corp.
Hordis Brothers, Inc.

Manufacturers of Fabricated Glass Products:
Advanced Coating Technology
Ford Motor Co., Glass Div.
Guardian Industries Corp.
Hordis Brothers, Inc.
Libbey-Owens-Ford Co.
PPG Industries, Inc.

Equal products of other manufacturers maybe used in the work, provided such products have been approved by the Architect, not less than five (5) days prior to scheduled bid opening.

GLASS PRODUCTS, GENERAL:

IG Insulated Glass: Provide insulated glazing construction (1/4”, 1/2”, 1/4”) as indicated on the drawings, with exterior pane to be tempered Low E - 1/4” tinted on surface #2, ½” airspace, and inboard lite to be tempered 1/4” clear. Equal to AGC, Energy Select 28, Triple Silver, 62% Visible Trans, 13% Visible Reflect (Out), SHGC 0.28, U value Argon 0.24.

CT Glass (non rated): Provide 1/4" thick clear tempered, single pane glass.

Glass for Mirrors At Restrooms 109 and 111: Size shall be full length of countertop between wing walls. Hieght to be from backsplash at countertop to 6’-6” AFF. Mirror glass shall be FS DD-G-451, Type I, Class I, Quality q2, 1/4" thick, with silver coating, copper protective coating, and non-metallic paint coating complying with FS DD-M-411.

Primary Glass Standard: Provide primary glass which complete with FS DD-G-451 requirements, including those indicated by reference to type, class, quality and form.

Heat-Treated Glass Standard: Provide heat-treated glass which complies with FS DD-G-1403 requirements, including those indicated by reference to grade, style, type, quality and class.

Primary Glass Standard: Provide primary glass which complete with FS DD-G-451 requirements, including those indicated by reference to type, class, quality and form.

Heat-Treated Glass Standard: Provide heat-treated glass which complies with FS DD-G-1403 requirements, including those indicated by reference to grade, style, type, quality and class.

PRIMARY GLASS PRODUCTS:

Tinted Float Glass: Type I, Class 1 (transparent), quality q3 (glazing select).

HEAT-TREATED GLASS PRODUCTS:

Manufacturing Process: Manufacture heat-treated glass as follows:

1. By horizontal (roller hearth) process with roll wave distortion parallel with bottom edge of glass as installed, unless otherwise indicated.

Clear Tempered Float Glass: Grade B (fully tempered), style I (uncoated surfaces), Type I (float), quality q3 (glazing quality), Class 1 (transparent). 1/4" thick.

Tinted Tempered Float Glass: Grade B (fully tempered), Style I (uncoated surfaces), Type I (float), class 2 (heat absorbing), of tint and with performance characteristics for 1/4" thick glass indicated below:

1. Match tint and performance characteristics specified for tinted float glass.

GLAZING SEALANTS:

General: Comply with recommendations of sealant and glass manufacturers for selection of glazing sealants which have performance characteristics suitable for applications indicated and conditions at time of installation.

Compatibility: Select sealants with proven compatibility with surfaces contacted in the installation and under service conditions indicated, as demonstrated by testing and field experience.

Colors: Provide color of exposed sealants indicated or, if not otherwise indicated, as selected by Architect from manufacturer's standard colors.

2-Part Polysulfide Glazing Sealant: Polysulfide elastomeric sealant complying with FS TT-S-00227, Class A, Type 2; and with ASTM C 920, Type M, Grade NS, Class 25, Use G and, as applicable to use indicated, Uses A and O.

Performed Butyl-Polyisobutylene Glazing Tape: Blend of butyl- polyisobutylene rubber with a solids content of 100%, in extruded tape form, complying with AAMA 807.1, packaged on rolls with a release paper on side, with or without continuous spacer rod as recommended by manufacturers of tapes and glass for application indicated.

Manufacturers: The following manufacturers' products have been used to establish minimum standards for materials, workmanship and function:

2-Part Polysulfide Glazing Sealants:
Sonolastic Two-part; Sonneborn Building Products Div.,
Rexnord Chemical Products, Inc.
Chem-Calk 100; Woodmont Products, Inc.

Preformed Butyl-Polyisobutylene Glazing Tape:
PTI 606; Protective Treatments, Inc.
PTI 303; Protective Treatments, Inc.
Tremco Polyshim Tape; Tremco.
Tremco 440 Tape; Tremco.
SST 800 Tape; Tremco.

Equal products of other manufacturers may be used in the work, provided such products have been approved by the Architect, not less than five (5) days prior to scheduled bid opening.

MISCELLANEOUS GLAZING MATERIALS:

Compatibility: Provide materials with proven record of compatibility with surfaces contacted in installation.

Cleaners, Primers and Sealers: Type recommended by sealant or gasket manufacturer.

Setting Blocks: Neoprene, EPDM or silicone blocks as required for compatibility with glazing sealants, 80 to 90 Shore A duro-meter hardness.

Spacers: Neoprene, EPDM or silicone blocks, or continuous extrusions, as required for compatibility with glazing sealant, of size, shape and hardness recommended by glass and sealant manufacturers for application indicated.

Edge Blocks: Neoprene EPDM or silicone blocks as required for compatibility with glazing sealant, of size and hardness required to limit lateral movement (side-walking) of glass.

PART 3 – EXECUTION

INSPECTION:

Require Glazier to inspect work of glass framing erector for compliance with manufacturing and installation tolerances, including those for size, squareness, offsets at corners; for presence and functioning of weep system; for existence of minimum required face or edge clearances; and for effective sealing of joinery. Obtain Glazier's written report listing conditions detrimental to performance of glazing work. Do not allow glazing work to proceed until unsatisfactory conditions have been corrected.

PREPARATION:

Clean glazing channels and other framing members to receive glass, immediately before glazing. Remove coatings which are not firmly bonded to substrates. Remove lacquer from metal surfaces where elastomeric sealants are indicated for use.

GLAZING, GENERAL:

Comply with combined printed recommendations of glass manufacturers, of manufacturers of sealants, gaskets and other glazing materials, except where more stringent requirements are indicated, including those of referenced glazing standards.

Glazing channel dimensions as indicated in details are intended to provide for necessary bite on glass, minimum edge and face clearances, and adequate sealant thickness' with reasonable tolerances. Adjust as required by job conditions at time of installation.

Protect glass from edge damage during handling and installation; use a rolling block in rotating glass units to prevent damage to glass corners. Do not impact glass with metal framing. Use suction cups to shift glass units within openings; do not raise or drift glass with a pry bar. Rotate glass with flares or bevels along one horizontal edge which would occur in vicinity of setting blocks so that these are located at top of opening. Remove from project and dispose of glass units with edge damage or other imperfections of kind that, when installed, weakens glass and impairs performance and appearance.

Apply primers to joint surfaces where required for adhesion of sealants, as determined by pre-construction sealant-substrate testing.

GLAZING:

Install setting blocks of proper size in sill rabbet, located one quarter of glass width from each corner, but no closer than 6", unless otherwise required. Set blocks in thin course of sealant which is acceptable for heel bead use.

Provide spacers inside and out, of correct size and spacing to preserve required face clearances, for glass sizes larger than 50 unit inches, except where gaskets or glazing tapes with continuous spacer rods are used for glazing. Provide 1/8" minimum bite of spacers on glass and use thickness equal to sealant width, except with sealant tape use thickness slightly less than final compressed thickness of tape.

Provide edge blocking to comply with requirements of referenced glazing standard, except where otherwise required by glass unit manufacturer.

Set units of glass in each series with uniformity of pattern, draw, bow and similar characteristics.

Provide compressible filler rods or equivalent back-up material, as recommended by sealant and glass manufacturers, to prevent sealant from extruding into glass channel weep systems and from adhering to joints back surface as well as to control depth of sealant for optimum performance, unless otherwise indicated.

Force sealants into glazing channels to eliminate voids and to ensure complete "wetting" or bond of sealant to glass and channel surfaces.

Tool exposed surfaces of sealants to provide a substantial "wash" way from glass. Install pressurized tapes and gaskets to protrude slightly out of channel, so as to eliminate dirt and moisture pockets.

Where wedge-shaped gaskets are driven into one side of channel to pressurized sealant or gasket on opposite side, provide adequate anchorage to ensure that gasket will not "walk" out when installation is subjected to movement.

Miter cut wedge-shaped gaskets at corners and install gaskets in manner recommended by gasket manufacturer to prevent pull away at corners; seal corner joints and butt joints with sealant recommended by gasket manufacturer.

PROTECTION AND CLEANING:

Protect exterior glass from breakage immediately upon installation by use of crossed streamers attached to framing and held away from glass. Do not apply markers to surfaces of glass. Remove nonpermanent labels and clean surfaces.

Examine glass surface adjacent to or below exterior concrete and other masonry surfaces at frequent intervals during construction, but not less often than once a month, for build-up of dirt, scum, alkali deposits or staining. When examination reveals presence of these forms of residue, remove by method recommended by glass manufacturer.

Remove and replace glass which is broken, chipped, cracked, abraded, or damaged in other ways during construction period including natural causes, accidents and vandalism.

Wash glass on both faces not more than 4 days prior to date schedule for inspection intended to establish date of substantial completion in each area of project. Wash glass by method recommended by glass manufacturer.

END OF SECTION 08800

SECTION 09250 - GYPSUM DRYWALL

PART 1 – GENERAL

RELATED DOCUMENTS:

Drawings and general provisions of Contract including General and Supplementary Conditions and Division 1 Specification sections apply to work of this section.

DESCRIPTION OF WORK:

Types of work include:

1. Gypsum drywall at walls and ceilings.
2. Drywall finishing (joint tape-and-compound treatment).

QUALITY ASSURANCE:

Fire-Resistance Ratings: Where gypsum drywall systems with fire- resistance ratings are indicated, provide materials and installations which are identical with those of applicable assemblies tested per ASTM E 119 by fire testing laboratories acceptable to authorities having jurisdiction.

1. Provide fire-resistance rated assemblies identical to those indicated by reference to GA File No.'s. in GA "Fire Resistance Design Manual" or to design designations in UL "Fire Resistance Directory" or in listing of other testing and agencies acceptable to authorities having jurisdiction.

Gypsum Board Terminology Standard: GA-505 by Gypsum Association.

Single-Source Responsibility: Obtain gypsum board products from a single manufacturer, or from manufacturers recommended by the prime manufacturer of gypsum boards.

SUBMITTALS:

Product Data: Submit manufacturer's product specifications and installation instructions for each gypsum drywall component, including other data as may be required to show compliance with these specifications.

DELIVERY, STORAGE AND HANDLING:

Deliver materials in original packages, containers or bundles bearing brand name and identification of manufacturer or supplier.

Store material inside under cover and in manner to keep them dry, protected from weather, direct sunlight, surface contamination, corrosion and damage from construction traffic and other causes. Neatly stack gypsum boards flat to prevent sagging.

Handle gypsum boards to prevent damage to edges, ends or surfaces. Protect metal corner beads and trim from being bent or damaged.

PROJECT CONDITIONS:

Environmental Requirements, General: Comply with requirements of referenced gypsum board application standards and recommendations of gypsum board manufacturer, for environmental conditions before, during and after application of gypsum board.

Cold Weather Protection: When ambient outdoor temperatures are below 55 degrees F maintain continuous, uniform, comfortable building working temperatures of not less than 55 degrees F for a minimum period of 48 hours prior to, during and following application of gypsum board and joint treatment materials or bonding of adhesives.

Ventilation: Ventilate building spaces as required to remove water in excess of that required for drying of joint treatment material immediately after its application. Avoid drafts during dry, hot weather to prevent too rapid drying.

PART 2 – PRODUCTS

Manufacturer: The following manufacturers' products have been used to establish minimum standards for materials, workmanship and function:

Gypsum Board and Related Products:
Georgia-Pacific Corp.
Gold Bond Building Products Div., National Gypsum Co.
United States Gypsum Co.
CertainTeed Corporation
Lafarge North America

Equal products of other manufacturers may be used in the work, provided such products have been approved by the Architect, not less than five (5) days prior to scheduled bid opening.

Gypsum Wallboard: ASTM C 36, of types, edge configuration and thickness indicated below; in maximum lengths available to minimize end-to-end butt joints.

Types as follows:

1. Provide Type “X” fire-resistant at where identified by a UL Listing or Classification or as denoted on the drawings.
2. Provide Type “C”, fire-resistant where identified by a UL Listing or Classification where denoted on the drawings.
5. Thickness: 5/8" unless otherwise indicated.
6. Edges: Manufacturer's standard.

TRIM ACCESSORIES:

General: Provide manufacturer's standard trim accessories of types indicated for drywall work, formed of galvanized steel unless otherwise indicated, with either knurled and perforated or expanded flanges for nailing or stapling, and beaded for concealment of flanges in joint compound. Provide corner beads, L-type edge trim-beads, U-type edge trim-beads, special L-kerf-type edge trim-beads, and one-piece control joint beads.

Non-Beaded Trim: Non-beaded trim shall not be used, except with specific approval by the Architect.

JOINT TREATMENT MATERIALS:

General: ASTM C 475; type recommended by the manufacturer for the application indicated, except as otherwise indicated.

Joint Tape: Paper reinforcing tape.

Joint Compound: Ready-mixed vinyl-type for interior use.

1. Grade: A single multi-purpose grade, for entire application.

MISCELLANEOUS MATERIALS:

General: Provide auxiliary materials for gypsum drywall work of the type and grade recommended by the manufacturer of the gypsum board.

Gypsum Board Screws: Comply with ASTM C 646.

Gypsum Board Nails: Comply with ASTM C 514.

Concealed Acoustical Sealant: Nondrying, nonhardening, nonskinning, nonstaining, nonbleeding, gunnable sealant for concealed applications per ASTM C 919.

Exposed Acoustical Sealant: Nonoxidizing, skinnable, paintable, gunnable sealant for exposed applications per ASTM C 919.

Water-Resistant Adhesive: Type I organic adhesive for ceramic tile complying with ANSI A136.1.

PART 3 – EXECUTION

GENERAL GYPSUM BOARD INSTALLATION REQUIREMENTS:

Gypsum Board Application and Finishing Standards: ASTM C 840 and GA 216.

Locate exposed end-butt joints as far from center of walls possible, and stagger not less than 1'-0" in alternate courses of board.

Install wall/partition boards vertically to avoid end-butt joints wherever possible.

Install exposed gypsum board with face side out. Do not install imperfect, damaged or damp boards. Butt boards together for a light contact at edges and ends with not more than 1/16" open space between boards. Do not force into place.

Locate all edge and end joints over supports. Stagger vertical joints over different studs on opposite sides of partitions.

Attach gypsum board to supplementary framing and blocking provided for additional support at openings and cutouts.

Form control joints and expansion joints with space between edges of boards, prepared to receive trim accessories.

Cover both faces of stud framing with gypsum board in concealed spaces (above ceilings, etc.), except in chase walls which are braced internally.

1. Except where concealed application is required for sound, fire, air or smoke ratings, coverage may be accomplished with scraps of not less than 8 sq. ft. area, and may be limited to not less than 75% of full coverage.

Isolate perimeter of non-load-bearing drywall partitions at structural abutments. Provide 1/4" to 1/2" space and trim edge with J-type semi-finishing edge trim. Seal joints with acoustical sealant.

Space fasteners in gypsum boards in accordance with referenced standards and manufacturer's recommendations, except as otherwise indicated.

METHODS OF GYPSUM DRYWALL APPLICATION:

Single-Layer Application: Install gypsum wallboard.

1. On partitions/walls apply gypsum board vertically unless otherwise indicated, and provide sheet lengths which will minimize end joints.

INSTALLATION OF DRYWALL TRIM ACCESSORIES:

General: Where feasible, use the same fasteners to anchor trim accessory flanges as required to fasten gypsum board to the supports. Otherwise, fasten flanges by nailing or stapling in accordance with manufacturer's instructions and recommendations.

Install metal corner beads at external corners of drywall work.

Install metal edge trim whenever edge of gypsum board would otherwise be exposed or semi-exposed, and except where plastic trim is indicated. Provide type with face flange to receive joint compound except where semi-finishing type is indicated. Install L-type trim where work is tightly abutted to other work, and install special kerf-type where other work is kerfed to receive long leg of L-type trim. Install U-type trim where edge is exposed, revealed, gasketed, or sealant-filled (including expansion joints).

Install semi-finishing trim where indicated, and where exterior gypsum board edges are not covered by applied moldings or indicated to receive trim with face flanges covered with joint compound.

Provide control joints horizontally and/or vertically at no less than 24'-0" o.c. max. Refer to plans for specific location or installed as directed by Architect.

Install H-molding in exterior gypsum drywall work where control joints are indicated.

FINISHING OF DRYWALL:

General: Apply treatment at gypsum board joints (both directions), flanges of trim accessories, penetrations, fastener heads, surface defects and elsewhere as required to prepare work for decoration. Prefill open joints and rounded or beveled edges, if any, using type of compound recommended by manufacturer.

1. Apply joint tape at joints between gypsum boards, except where trim accessories are indicated.
2. Apply joint compound in 3 coats (not including prefill of openings in base), and sand between last 2 coats and after last coat.
3. Tape and finish gypsum board in accordance with ASTM C 840, GA 214 and GA 216.
4. Plenum areas above ceilings shall be finished to Level 1 in accordance with GA 214.

5. ALL EXPOSED gypsum board surfaces shall be finished to Level 5 in accordance with GA 214. In accordance with GA 214 Level 5, apply a thin skim coat of joint compound to the entire gypsum board surface, after the two-coat joint and fastener treatment is complete and dry.
6. Provide joint, fastener depression, and corner treatment. Do not use fiber glass mesh tape with conventional drying type joint compounds; use setting or hardening type compounds only. Provide treatment for water-resistant gypsum board as recommended by the gypsum board manufacturer.

Partial Finishing: Omit third coat and sanding on concealed drywall work which is indicated for drywall finishing or which requires finishing to achieve fire-resistance rating, sound rating or to act as air or smoke barrier.

Refer to section on painting in Division 9 for decorative finishes to be applied to drywall work.

PROTECTION OF WORK:

Provide final protection and maintain conditions, in a manner suitable to Installer, which ensures gypsum drywall work being without damage or deterioration at time of substantial completion.

END OF SECTION 09250

SECTION 09300 – QUARRY TILE

PART 1 - GENERAL

RELATED DOCUMENTS:

Drawings and general provisions of Contract including General and Supplementary Conditions and Division 1 Specification sections apply to work of this section.

DESCRIPTION OF WORK:

Definition: Tile includes ceramic surfacing units made from clay or other ceramic materials.

Extent of tile work is indicated on drawings and schedules.

Types of tile work in this section include the following:

1. Unglazed quarry tile.
2. Stone thresholds.

Portland cement plaster scratch coat on wall surfaces indicated to receive tile is work of this section.

Sealing expansion and other joints in tile work with elastomeric joint sealers is work of this section.

QUALITY ASSURANCE:

Source of Materials: Provide materials obtained from one source for each type and color of tile, grout, and setting materials.

SUBMITTALS:

Product Data: Submit manufacturer's technical information and installation instructions for materials required, except bulk materials.

Samples for Selection Purposes: Submit manufacturer's color charts consisting of actual tiles or sections of tile showing full range of colors, textures and patterns available for each type of tile indicated. Include samples of grout and accessories involving color selection.

PRODUCT HANDLING:

Deliver and store packaged materials in original containers with seals unbroken and labels intact until time of use. Prevent damage or contamination to materials by water, freezing, foreign matter or other causes.

PROJECT CONDITIONS:

Maintain environmental conditions and protect work during and after installation to comply with referenced standards and manufacturer's printed recommendations.

Vent temporary heaters to exterior to prevent damage to tile work from carbon dioxide buildup.

Maintain temperatures at not less than 50 degrees F in tiled areas during installation and for 7 days after completion, unless higher temperatures required by referenced installation standard or manufacturer's instructions.

PART 2 – PRODUCTS

Manufacturers: The following manufacturers' products have been used to establish minimum standards for materials, workmanship and function:

Unglazed Quarry Floor and Base Tile:
American Olean Tile Co.
Dal-Tile Corporation
Summitville Tiles, Inc.
Metropolitan Quarry Tile Co.

Equal products of other manufacturers may be used in the work, provided such products have been approved by the Architect, not less than five (5) days prior to scheduled bid opening.

PRODUCTS, GENERAL:

ANSI Standard for Ceramic Tile: Comply with ANSI A137.1 "American National Standard Specifications for Ceramic Tile" for types and grades of tile indicated.

1. Furnish tile complying with "Standard Grade" requirements unless otherwise indicated.

ANSI Standard for Tile Installation Materials: Comply with ANSI standard referenced with installation products and materials indicated.

Colors, Textures and Patterns: For tile and other products requiring selection of colors, surface textures or other appearance characteristics, provide products to match characteristics indicated or, if not otherwise indicated, as selected by Architect.

1. Provide tile trim and accessories which match color and finish of adjoining flat tile.

Mounting: Where factory-mounted tile is required provide back- or edge-mounted tile assemblies as standard with manufacturer unless another mounting method is indicated.

1. Where tile is indicated for installation on exteriors or in wet areas, do not use back- or edge-mounted tile assemblies unless tile manufacturer specifies that this type of mounting is suitable for these kinds of use and has been successfully used on other projects.

TILE PRODUCTS:

Unglazed Quarry Floor Tile: Provide square-edged flat tile complying with the following requirements:

1. Field Color: Equal to Daltile “Quarry Textures” Price Group #1.
2. Wearing Surface: Slip-resistant tile.
3. Nominal Facial Dimensions: 8" x 8"
4. Nominal Thickness: 1/2".
5. Face: Plain with square edge.
6. Base: Shall be 5” x 8”, coved. The quarry base tile used must be the cove type tile in all areas where indicated to receive quarry tile. The cove base tile must be installed before the floor tile and installed so that the bottom of the cove is at the same height as the top of the floor tile’s surface avoiding a right angle where the two tiles meet. Do not set the cove base tile on top of the floor tile.

Trim Units For Quarry Tile: Provide tile trim units to match characteristics of adjoining flat tile and to comply with following requirements:

1. Size: As indicated, coordinated with sizes and coursing of adjoining flat tile, where applicable.
2. Shapes: As follows, selected from manufacturer's standard shapes.
3. Base for Portland Cement Mortar Installation: Coved.
4. External Corners for Portland Cement Mortar Installations: Coved shape with a radius of not less than 3/4" unless otherwise indicated.
5. Internal Corners: Field-butted square corners, except use internal cove and cap angle pieces designed to member with stretcher shapes.

STONE THRESHOLDS:

General: Provide stone which is uniform in color and finish, fabricated to sizes and profiles indicated or required to provide transition between tile surfaces and adjoining finished floor surfaces.

Marble Thresholds: Provide marble thresholds complying with ASTM C 503 requirements for exterior use and abrasion resistant for uses subject to heavy foot traffic.

1. Provide white, bonded marble complying with MIA Group "A" requirements for soundness.

SETTING MATERIALS:

Portland Cement Mortar Installation Materials: Provide materials to comply with ANSI A108.1 as required for installation method designated, unless otherwise indicated.

GROUTING MATERIALS:

Stainless Grout: Equal to Latapoxy SP-100.

MISCELLANEOUS MATERIALS:

Single-Component Sealants: ASTM C 920, Type S, Grade NS, use NT (for use in joints in non-traffic areas).

Two-Component Sealants: ASTM C 920, Type M, Grade P, Class 25, use T (for use in joints subject to pedestrian traffic).

Tile Cleaner: Product specifically acceptable to manufacturer of tile and grout manufacturer for application indicated and as recommended by National Tile Promotion Federation, 112 North Alfred St., Alexanderia, VA 22134 or Ceramic Tile Institute, 700 N. Virgil Ave., Los Angeles, CA 90029.

PART 3 – EXECUTION

INSPECTION:

Examine surfaces to receive tile work and conditions under which tile will be installed. Do not proceed with tile work until surfaces and conditions comply with requirements indicated in referenced tile installation standard.

INSTALLATION, GENERAL:

ANSI Tile Installation Standard: Comply with applicable parts of ANSI 108 series of tile installation standards included under "American National Standard Specifications for the Installation of Ceramic Tile".

TCA Installation Guidelines: TCA "Handbook for Ceramic Tile Installation"; comply with TCA installation methods indicated or, if not otherwise indicated, as applicable to installation conditions shown.

Setting beds for quarry tile floors shall be 1-1/4" thick as indicated on plans. Base tile shall be installed on thinset.

Extend tile work into recesses and under or behind equipment and fixtures, to form a complete covering without interruptions, except as otherwise shown. Terminate work neatly at obstructions, edges and corners without disrupting pattern or joint alignments.

Accurately form intersections and returns. Perform cutting and drilling of tile without marring visible surfaces. Carefully grind cut edges of tile abutting trim, finish or built-in items for straight aligned joints. Fit tile closely to electrical outlets, piping, fixtures and other penetrations so that plates, collars, or covers overlap tile.

Jointing Pattern: Unless otherwise shown, lay tile in grid pattern. Align joints when adjoining tiles on floor, base, walls and trim are same size. Layout tile work and center tile fields in both directions in each space or on each wall area. Adjust to minimize tile cutting. Provide uniform joint widths, unless otherwise shown.

1. For tile mounted in sheets make joints between tile sheets same width as joints within tile sheets so that extent of each sheet is not apparent in finished work.

Lay out tile wainscots to next full tile beyond dimensions indicated.

Expansion Joints: Locate expansion joints and other sealant filled joints, including control, contraction and isolation joints, where indicated, or if not indicated, at spacing and locations recommended in TCA "Handbook for Ceramic Tile Installation", and approved by Architect.

1. Prepare joints and apply sealants to comply with requirements of referenced standards and sealant manufacturer.

Grout tile to comply with referenced installation standards, using grout materials indicated.

FLOOR INSTALLATION METHODS:

Quarry Tile: Install tile to comply with requirements indicated below for setting bed method, TCA installation method related to type of subfloor construction, and grout type:

1. Portland Cement Mortar: ANSI A108.1.
2. Bond Coat: Portland cement paste on plastic bed.
3. Concrete Subfloor, Interior: TCA F111 (cleavage membrane).
4. Grout: Stainless Grout equal to Latapoxy SP-100. Grout color to be selected from standard ranges by Architect.

Stone Thresholds: Install stone thresholds at locations indicated; set in same type of setting bed as abutting field tile unless otherwise indicated.

Metal Edge Strips: Install at locations indicated or where exposed edge of tile flooring meets carpet, wood or other flooring which finishes flush with top of tile.

BASE TILE INSTALLATION METHODS:

Install types of tile designated for wall application to comply with requirements indicated below for setting bed methods, TCA installation methods related to subsurface wall conditions, and grout types:

1. Solid Backing, Interior: TCA W221 in wet areas and W213 or W223 25 applicable in other areas.
2. Grout: Stainless Grout equal to Latapoxy SP-100. Grout color to be selected from standard ranges by Architect.

CLEANING AND PROTECTION:

Cleaning: Upon completion of placement and grouting, clean all ceramic tile surfaces so they are free of foreign matter.

1. Unglazed tile shall be cleaned with non-acid solutions only recommended by tile and grout manufacturer's printed instructions, but no sooner than 14 days after installation. Protect metal surfaces, cast iron and vitreous plumbing fixtures from effects of tile cleaning. Flush surface with clean water after cleaning.
2. Apply quarry tile filler to clean, dry quarry tile in compliance with filler manufacturer's directions. Repeat application as necessary to obtain uniform color in appearance of both tile and grout.

Finished Tile Work: Leave finished installation clean and free of cracked, chipped, broken, unbonded, or otherwise defective tile work.

Protection: When recommended by tile manufacturer, apply a protective coat of neutral protective cleaner to completed tile walls and floors. Protect installed tile work with kraft paper or other heavy covering during construction period to prevent staining, damage and wear.

Prohibit foot and wheel traffic from using tiled floors for at least 7 days after grouting is completed.

Before final inspection, remove protective coverings and rinse neutral cleaner from tile surfaces.

EXTRA STOCK:

Deliver stock of maintenance materials to Owner. Furnish maintenance materials from same manufactured lot as materials installed and enclosed in protective packaging with appropriate identifying labels.

1. Tile Flooring: Furnish not less than one box for each type, color, pattern and size installed.

END OF SECTION 09300

SECTION 09510 - ACOUSTICAL CEILINGS

This section is specific to the lay-in vinyl ceiling located in the Commercial Kitchen.)

PART 1 – GENERAL

RELATED DOCUMENTS:

Drawings and general provisions of Contract including General and Supplementary Conditions and Division 1 Specification Sections apply to work of this section.

SUMMARY:

Extent of acoustical ceilings specified in this section include the following:

1. Acoustical lay-in panel ceilings in an exposed suspended metal grid system.

SUBMITTALS:

Product Data: Submit manufacturer's technical data for each type of acoustical ceiling unit and suspension system required.

1. Full size sample of each acoustical panel type, pattern and color.
2. Set of 12" long samples of exposed runners and moldings for each color and system type required.

Certificates: Submit certificates from manufacturers of acoustical ceiling units and suspension systems attesting that their products comply with specification requirements.

QUALITY ASSURANCE:

Fire Performance Characteristics: Provide acoustical ceiling components that are identical to those tested for the following fire performance characteristics, according to ASTM test method indicated, by UL or other testing and inspecting agency accept- able to authorities having jurisdiction. Identify acoustical ceiling components with appropriate marking of applicable testing and inspecting agency.

1. Surface Burning Characteristics: As follows, tested per ASTM E 84.
2. Flame Spread: 25 or less.
3. Smoke Developed: 50 or less.

Fire Resistance Ratings: As indicated by reference to design designation in UL "Fire Resistance Directory" for floor, roof or beam assemblies in which acoustical ceilings

function as a fire protective membrane; tested per ASTM E 119. Provide protection materials for lighting fixtures and air ducts to comply with requirements indicated for rated assembly.

Coordination of Work: Coordinate layout and installation of acoustical ceiling units and suspension system components with other work supported by, or penetrating through, ceilings, including light fixtures, HVAC equipment, fire-suppression system components (if any), and partition system (if any).

DELIVERY, STORAGE AND HANDLING:

Deliver acoustical ceiling units to project site in original, unopened packages and store them in a fully enclosed space where they will be protected against damage from moisture, direct sunlight, surface contamination or other causes.

Before installing acoustical ceiling units, permit them to reach room temperature and a stabilized moisture content.

Handle acoustical ceiling units carefully to avoid chipping edges or damaging units in any way.

PROJECT CONDITIONS:

Space Enclosures: Do not install interior acoustical ceilings until space is enclosed and weatherproof, wet-work in space is completed and nominally dry, work above ceilings is complete and ambient conditions of temperature and humidity will be continuously maintained at values near those indicated for final occupancy.

PART 2 – PRODUCTS

VINYL COVERED CEILING PANELS: Where indicated provide 24" x 24" x 1/2" vinyl face and back covered gypsum ceiling panels equal to US&G “Sheetrock brand lay-In Ceiling Tile “ClimalPlus”, in exposed suspended grid system. Color shall be white.

Manufacturers: The following manufacturers' products have been used to establish minimum standards for materials, workmanship and function:

Georgia-Pacific Corporation
Gold Bond Division of National Gypsum Company
United States Gypsum Co.
BPB America, Inc.

Equal products of other manufacturers may be used in the work provide such products have been approved, by the Architect, not less than five (5) days prior to scheduled bid opening.

Acoustical Ceiling Units: Provide manufacturer's standard units of configuration indicated which are prepared for mounting method designated and which comply with FS SS-S-118 requirements, including those indicated by reference to type, form, pattern, grade (NRC or NIC' as applicable), light reflectance coefficient (LR), edge detail, and joint detail (if any).

1. Mounting Method for Measuring NRC: No. 7 (mechanically mounted on special metal support), FS SS-S-118; or Type E-400 mounting as per ASTM E 795.

Sound Attenuation Performance: Provide acoustical ceiling units with ratings for ceiling sound transmission class (STC) of range indicated as determined according to AMA 1-II "Ceiling Sound Transmission Test by Two-Room Method" with ceilings continuous at partitions and supported by a metal suspension system of type appropriate for ceiling unit of configuration indicated (concealed for tile, exposed for panels).

Colors, Textures and Patterns: Provide products to match appearance characteristics indicated or, if not otherwise indicated, as selected by Architect from manufacturer's standard colors, surface textures, and patterns available for acoustical ceiling units and exposed metal suspension system members of quality designated.

METAL SUSPENSION SYSTEMS, GENERAL:

Manufacturers: The following manufacturers' products have been used to establish minimum standards for materials, workmanship and function:

Metal Suspension System with Vinyl Covered Panels: Equal to USG's Donn ZXLA galvanized steel grid with aluminum cap, with white finish.

Chicago Metallic Corporation
USG Interiors Inc.
Armstrong World Industries, Inc.
BPB America, Inc.

Equal products of other manufacturers may be used in the work provide such products have been approved, by the Architect, not less than five (5) days prior to scheduled bid opening.

Standard for Metal Suspension Systems: Provide metal suspension systems of type, structural classification and finish indicated which comply with applicable STM C 635 requirements.

Finishes and Colors: Provide manufacturer's standard factory applied finish for type of system indicated. For exposed suspension members and accessories with painted finish, provide color indicated or, if not otherwise indicated, as selected by Architect from manufacturer's full range of standard colors.

Work to be concealed: Verify work above support system is complete, tested, and installed in manner that will not affect layout and installation of ceiling system.

Fire rated assembly: Construction above ceiling system shall meet requirements as applicable to provide fire-resistance rating specified.

Field dimensions: Installer must verify actual field dimensions prior to installation.

Renovation work: Installing contractor shall verify that existing ceiling structure is adequate to support additional ceiling suspension requirement.

Coordination: Coordinate and schedule installation of ceiling system with work of other trades affected by this installation, with particular attention given to mechanical and electrical work required to be installed and operating before ceiling work can begin.

Reference: Install in accordance with approved shop drawings and manufacturer's instructions. Follow architects' details for thermal and building expansion joint treatments.

Spacing: Space hanger wires maximum 48" (1200 mm) o. c. along length of carrier system, attached directly to structure above.

Limitation: Do not support hanger wires from mechanical and/or electrical equipment, piping, or other equipment occurring above ceiling.

1. Provide additional fixture support as required in accordance with local building codes or other regulatory agencies.
2. Install according to procedure provided by manufacturer and in accordance with approved shop drawings.
3. Deflection on installed system: Maximum deflection shall not exceed 1/360 of the span.

PART 3 – EXECUTION

PREPARATION:

Coordination: Furnish layouts for inserts, clips, or other supports required to be installed by other trades for support of acoustical ceilings.

1. Furnish concrete inserts and similar devices to other trades for installation well in advance of time needed for coordination of other work.

Measure each ceiling area and establish layout of acoustical units to balance border

widths at opposite edges of each ceiling. Coordinate ceiling layout with lighting layout. Avoid use of less-than-half width units at borders, and comply with reflected ceiling plans.

INSTALLATION:

General: Install materials in accordance with manufacturer's printed instructions, and to comply with governing regulations, fire-resistance rating requirements as indicated, and CISCA standards applicable to work.

Arrange acoustical units and orient directionally-patterned units (if any) in manner shown by reflected ceiling plans.

Install suspension systems to comply with ASTM C 636, with hangers supported only from building structural members. Locate hangers within 6" inches from each end and spaced 4'-0" along each carrying channel or direct-hung runner, unless otherwise indicated, leveling to tolerance of 1/8" n 12'-0".

1. Secure wire hangers by looping and wire-tying, either directly to structures or to inserts, eye-screws, or other devices which are secure and appropriate for substrate, and which will not deteriorate or fail with age or elevated temperature.
2. Install hangers plumb and free from contact with insulation or other objects within ceiling plenum which are not part of supporting structural or ceiling suspension system. Splay hangers only where required to miss obstructions and offset resulting horizontal force by bracing, countersplaying or other equally effective means.

Install edge moldings of type indicated at perimeter of acoustical ceiling area and at locations where necessary to conceal edges of acoustical units.

1. Sealant Bed: Apply continuous ribbon of acoustical sealant, concealed on back of vertical leg before installing moldings.
2. Screw-attached moldings to substrate at intervals not over 16" o.c. and not more than 3" from ends, leveling with ceiling suspension system to tolerance of 1/8" in 12'-0". Miter corners accurately and connect securely.

Install acoustical panels in coordination with suspension system with edges concealed by support of suspension members. Scribe and cut panels to fit accurately at borders and at penetrations.

Install hold-down clips on panels, within 10’-0"' of exterior door openings, where panels are other than horizontal, and in areas where required by governing regulations or for fire-resistance ratings; space as recommended by panel manufacturer, unless otherwise indicated or required.
EXTRA STOCK:

Deliver stock of maintenance materials to Owner. Furnish maintenance materials from same manufactured lot as materials installed and enclosed in protective packaging with appropriate identifying labels.

1. Ceiling Tile: Furnish not less than one box for each type, color, pattern and size installed.

END OF SECTION 09510

SECTION 09810 – POLISHED CONCRETE FLOOR

PART 1 – GENERAL

RELATED DOCUMENTS:

Drawings and general provisions of Contract including General and Supplementary Conditions and Division 1 Specification Section apply to this Section.

SUMMARY

This Section includes polished concrete finish for interior concrete flatwork.

Furnish all labor, material, equipment and services necessary for the dry diamond grinding and polishing of concrete floors in accordance with the manufactures requirements.

Applying densifying impregnator/sealer and polishing to specified sheen level and aggregate exposure.

Concrete must be cured a minimum of 28 days prior to polishing.

REFERENCES

American Concrete Institute (ACI):

1. ACI302.1R-89, Guide for Concrete Floor and Slab Construction.

American Society for Testing and Materials:

1. ASTM C779, Standard Test Method for Abrasion of Horizontal Concrete Surfaces.
2. ASTM C805, Impact Strength.
3. ASTM G23-81, Ultraviolet Light & Water Spray.
4. ASTM 1028, Co-efficient of Friction.
5. ASTM C 150, Type I, II Portland cement conformity, depending on soil conditions.
6. ASTM C 33, Aggregate conformity.

Other Tests:

1. Reflectivity.

SUBMITTALS

Product data for each grinding machine, including all types of grinding heads, dust extraction system, joint filler, concrete densifying impregnator, penetrating sealer, and any other chemicals used in the process.

Applicators qualification data.

Maintenance Procedures using the TWISTER™ Diamond Cleaning System.

QUALITY ASSURANCE

Manufacturer Qualifications: Manufacturer with a minimum of ten years experience manufacturing products in this section shall provide all products listed.

Installer Qualifications: Products listed in this section shall be installed by a single organization with at least five years experience successfully installing polished concrete flooring projects of similar type and scope as specified in this section. Installer/applicator shall be certified by the concrete finish equipment and chemical manufacturer and shall provide adequate number of skilled workmen who are thoroughly trained and experienced in the necessary craft.

Provide project names, addresses, contact names, phone numbers of at least (3) three projects of similar scope completed by the installer.

Manufacturer's Certification: Provide a letter of certification from both the equipment and chemical manufacturer stating that the installer is a certified applicator and is familiar with proper procedures and installation requirements recommended by the manufacturer.

Pre Installation Conference: Conduct conference at project site with architect and owner Present.

Mock-ups:

1. General Contractor to notify applicator 7 days prior to pour to schedule finish of mock-up.
2. Reserve 100 square feet for each color and finish at location adjacent to floor that will receive polish, but will be covered with another flooring material. Mock-up floor shall be placed on the same day, preferably the same pour as the floors to receive polish.
3. Install mock-ups to verify selections made under sample submittal and to demonstrate methods and workmanship proposed for the project. If mock-up not possible, submitted samples will be accepted as demonstrated methods & workmanship.
4. Aggregate selected must be tested to ensure it will accept polish.

5. If stand alone mockup required, form should be clean and free from extraneous substance and be at least a 12' x 12' with a level plywood bottom on level ground with unobstructed access around all four sides.
6. Control joints should be included in mock-up. Sawing performed by General Contractor can begin as soon as the surface is firm enough not to displace any of the aggregate.
7. Edges should be included in mock-up.
8. Approved mock-ups may become part of the completed work if undisturbed at time of substantial completion.

Protection: General Contractor shall protect areas to receive polished concrete finish at all times during construction to prevent oils, dirt, metal, excessive water and other potentially damaging materials from affecting the finished concrete surface. Protection measures listed below shall begin immediately after the concrete slab is poured:

1. All hydraulic powered equipment shall be diapered to avoid staining of the concrete.
2. All vehicle parking shall be prohibited on the finish slab area. If necessary to complete their scope of work, drop cloths shall be placed under vehicles at all times.
3. No pipe cutting machine shall be used on the finish floor slab.
4. Steel shall not be placed on the finish slab to avoid rusting.
5. Acids and acidic detergents will not come in contact with slab.
6. All painters will use drop cloths on the concrete. If paint gets on the concrete, it must be immediately removed.
7. All trades will be informed that the slab must be protected at all times.

Environmental Limitations

1. Comply with manufacturers written instructions for substrate temperature and moisture content, ambient temperature and humidity, ventilation and other conditions affecting chemical performance.

Flatness and levelness

1. Finish Concrete shall have a minimum Floor Flatness rating of at least 40.
2. Finish Concrete shall have a minimum Floor Levelness rating of at least 30.
3. Finish Concrete shall be cured a minimum of 28 days or at which point equipment can be put on the slab and does not displace aggregate.
4. Application of finish system shall take place a minimum of 21 days prior to fixture & trim installation and/or substantial completion.
5. Finish Concrete area shall be closed to traffic during finish floor application and after application, for the time as recommended by manufacturer.

PART 2 PRODUCTS

Manufacturers: The following manufacturers' products have been used to establish minimum standards for materials, workmanship and function:

HTC SuperFloor™, manufactured by HTC LLC.

Equal products of other manufacturers may be used in the work, provided such products have been approved by the Architect, not less than five (5) days prior to scheduled bid opening.

POLISHING MATERIALS

Three-phase 480 Volt generator and step down transformer.

3 head or 4 head counter rotating variable speed HTC Superfloor™ Approved Floor Grinder with at least 600 pounds down pressure. For example: HTC 950RX, HTC 800HDX, HTC 800 HD, HTC 650HDX, etc.

HTC Superfloor™ Dust extraction system, pre-separator, and squeegee attachments with minimum flow rating of 322 cubic feet per minute such as the HTC 75D.

Grinding Heads:

1. HTC Superfloor™ Metal bonded 150 grits.
2. HTC Superfloor™Resin bonded, phenolic diamonds, 400 grits.

Grinding Pads for Edges:

1. 60 grits.
2. 400 grits.

Hand Grinder with dust extraction attachment and pads.

Penetrating Liquid Sealer Hardener Densifying Impregnator or as specified by construction manager with the following performance criteria: chemically reactive, waterborne solution of inorganic silicate or siliconate materials and proprietary components; odorless; colorless which hardens and densifies concrete surfaces to protect against abrasion, dusting, and absorption of liquids.

Control Joint and Saw Cut Filler, two part filler or polyurea as specified by construction manager.

Water-based or solvent-based penetrating dye that produces a permanent, variegated or translucent color effects on the substrate.

PART 3 EXECUTION

PREPARATION

Installer shall examine and approve concrete substrate for conditions affecting performance of finish. General Contractor shall correct conditions that are found to be out of compliance with the requirements of this section. Repairs are not acceptable unless specifically approved on a case-by-case basis by the Architect.

Verify that base slab meet finish and surface profile requirements listed in Division 3, Section “Cast in Place Concrete”.

Provide floor clean of materials and debris.

Protect adjacent surfaces as required to prevent damage by the concrete polishing procedure.

Setup grinding machine, dust extraction system, tooling, and generator.

Ensure floor cured to accept polishing application.

POLISHED CONCRETE APPLICATION

Applicator shall examine the areas and conditions under which work of this section will be provided and the General Contractor shall correct conditions detrimental to the timely and proper completion of the work and the Applicator shall not proceed until unsatisfactory conditions are resolved.

Grind the concrete floor to within 2 -3 inches of walls with 16, 25, 40 and 80 grit removing construction debris, floor slab imperfections and until there is a uniform scratch pattern and desired concrete aggregate exposure is achieved. Vacuum the floor thoroughly using a squeegee vacuum attachment.

Apply material approved by architect for color effects in accordance with the architectural drawings and the manufacturers recommended guidelines.

Fill construction joints and cracks with filler products as specified in accordance with manufacturers instructions colored to match (or contrast) with concrete color as specified by architect.

Bull float cementitious grout coat onto surface to fill all voids, cement grout to match (or contrast) color of concrete, allow to cure overnight. Apply epoxy grout coat onto surface; allow to cure overnight, as specified by architect or construction manager.

Apply densifying impregnator undiluted at approximately 200 square feet per gallon using a stiff, long bristled broom. Cover the entire work area liberally and allow to sit for 10 minutes. Apply again to areas where the densifying impregnator has soaked in and allow to sit for an additional 30 minutes. Squeegee excess material off the floor. Allow 12 to 24 hours for full cure.

Grind the floor to within 2 - 3 inches of walls with metal bonded diamond grits of 150 and/or 300, grinding 90 degrees from each previous grind and removing all the scratches from the previous grit. Vacuum the floor thoroughly after each grind, using a squeegee vacuum attachment.

Grind the edges with 60 grit grinding pads, removing all of the scratches from the previous grit. Vacuum the floor thoroughly after each grind, using a squeegee vacuum attachment.

Polish the floor, to desired sheen level, with phenolic resin bonded diamond grits of 100, 200, 400, first polishing the edges with pads of the same grit and then the field of the floor, removing all scratches from the previous grit.

After the 400 grit clean the floor thoroughly. Then apply a water-based or solvent-based dye to the floor with an approved device (ex. solvent resistant sprayer, airless sprayer). The dye should be spread at a coverage rate of 200 ft^2 per gallon. If a richer color is desired another application may be required after 800 grit. After the application of the dye, dry buff with a white pad.

Polish the floor, to desired sheen level, with phenolic resin bonded diamond grits of 800, 1500, and 3000, first polishing the edges with pads of the same grit and then the field of the floor, removing all scratches from the previous grit.

Apply HTC Superfloor™ Stainguard, buff with a green 3000 grit Twister™ pad, as needed.

Upon completion, the work shall be ready for final inspection and acceptance by the customer.

PROTECTION

Protect the floors from damage until substantial completion.

END OF SECTION 09810

SECTION 09900 – PAINTING

PART 1 - GENERAL

RELATED DOCUMENTS:

Drawings and general provisions of Contract including General and Supplementary Conditions and Division 1 Specification sections apply to work of this section.

DESCRIPTION OF WORK:

Extent of painting work is indicated on drawings and schedules, and as herein specified including accent painting.

Work includes painting and finishing of interior and exterior exposed items and surfaces throughout project, except as otherwise indicated.

1. Surface preparation, priming and coats of paint specified are in addition to shop-priming and surface treatments specified under other sections of work.

Work includes field painting of exposed bare and covered pipes and ducts (including color coding), and of hangers, exposed steel and iron work, and primed metal surfaces of equipment installed under mechanical and electrical work, except as otherwise indicated.

"Paint" as used herein means all coating systems materials, including primers, emulsions, enamels, stains, sealers and fillers, and other applied materials whether used as prime, intermediate or finish coats.

Surfaces to be Painted: Except where natural finish of material is specifically noted as a surface not to be painted, paint exposed surfaces whether or not colors are designated in "schedules". Where items or surfaces are not specifically mentioned, paint the same as similar adjacent materials or areas. If color or finish is not designated, Architect will select these from standard colors or finishes available.

Following categories of work are not included as part of field-applied finish work.

1. Pre-Finished Items: Unless otherwise indicated, do not include painting when factory-finishing or installer finishing is specified for such items as (but not limited to) metal toilet enclosures, prefinished partition systems, acoustic materials, elevator entrance doors and frames, elevator equipment, and finished mechanical and electrical equipment, including light fixtures, switchgear and distribution cabinets.

2. Concealed Surfaces: Unless otherwise indicated, painting is not required on surfaces such as walls or ceilings in concealed areas and generally inaccessible areas, foundation spaces, furred areas, utility tunnels, pipe spaces, duct shafts and elevator shafts.
3. Finished Metal Surfaces: Unless otherwise indicated, metal surfaces of anodized aluminum, stainless steel, chromium plate, copper, bronze and similar finished materials will not require finish painting.
4. Operating Parts: Unless otherwise indicated, moving parts of operating units, mechanical and electrical parts, such as valve and damper operators, linkages, sinkages, sensing devices, motor and fan shafts will not require finish painting.

Following categories of work are included under other sections of these specifications.

1. Shop Priming: Unless otherwise specified, shop priming of ferrous metal items is included under various sections for structural steel, metal fabrications, hollow metal work and similar items.
2. Unless otherwise specified, shop priming of fabricated components such as shop-fabricated or factory-built mechanical and electrical equipment or accessories is included under other sections of these specifications.

Do not paint over any code-required labels, such as Underwriters' Laboratories and Factory Mutual, or any equipment identification, performance rating, name, or nomenclature plates.

QUALITY ASSURANCE:

Single Source Responsibility: Provide primers and other undercoat paint produced by same manufacturer as finish coats. Use only thinners approved by paint manufacturer, and use only within recommended limits.

Coordination of Work: Review other sections of these specifications in which prime paints are to be provided to ensure compatibility of total coatings system for various substrates. Upon request from other trades, furnish information or characteristics of finish materials provided for use, to ensure compatible prime coats are used.

SUBMITTALS:

Product Data: Submit manufacturer's technical information including paint label analysis and application instructions for each material proposed for use.

Samples: Prior to beginning work, Architect will furnish color chips for surfaces to be painted. Use representative colors when preparing samples for review. Submit samples for Architect's re- view of color and texture only.

Provide a listing of material and application for each coat of each finish sample. Provide a 4' x 4' sample application of each color paint for Architect's approval prior to final ordering of product. Sample application shall be applied in an inconspicuous place, satisfactory to the Architect.

DELIVERY AND STORAGE:

Deliver materials to job site in original, new and unopened packages and containers bearing manufacturer's name and label, and following information:

1. Name or title of material.
2. Fed. Spec. number, if applicable.
3. Manufacturer's stock number and date of manufacturer.
4. Manufacturer's name.
5. Contents by volume, for major pigment and vehicle constituents.
6. Thinning instructions.
7. Application instructions.
8. Color name and number.

Store materials not in actual use in tightly covered containers. Maintain containers used in storage of paint in a clean condition, free of foreign materials and residue.

1. Protect from freezing where necessary. Keep storage area neat and orderly. Remove oily rags and waste daily. Take all precautions to ensure that workmen and work areas are adequately protected from fire hazards and health hazards resulting from handling, mixing and application of paints.

JOB CONDITIONS:

Apply water-base paints only when temperature of surfaces to be painted and surrounding air temperatures are between 50 degree F and 90 degrees F, unless otherwise permitted by paint manufacturer's printed instructions.

Apply solvent-thinned paints only when temperature of surfaces to be painted and surrounding air temperatures are between 45 degree F and 95 degree F, unless otherwise permitted by paint manufacturer's printed instructions.

Do not apply paint in snow, rain, fog or mist, or when relative humidity exceeds 85% or to damp or wet surfaces, unless otherwise permitted by paint manufacturer's printed instructions.

1. Painting may be continued during inclement weather if areas and surfaces to be painted are enclosed and heated within temperature limits specified by paint manufacturer during application and drying periods.

PART 2 – PRODUCTS

Manufacturers: Pittsburgh Paints (PPG) or approved equal to the following specifications:

PPG 1006-1 Gypsum, Eggshell
PPG 1001-6 Knight's Armor, Eggshell
BM 2051-60 Bird's Egg, Eggshell

Locations as noted on the Construction Documents.

Equal products of other manufacturers may be used in the work, provided such products have been approved by the Architect, not less than five (5) days prior to scheduled bid opening.

MATERIALS:

Material Quality: Provide best quality grade of various types of coatings as regularly manufactured by acceptable paint materials manufacturers. Materials not displaying manufacturer's identification as a standard, best-grade product will not be acceptable.

1. Proprietary names used to designate colors or materials are not intended to imply that products of named manufacturers are required to exclusion of equivalent products of other manufacturers.
2. Federal Specifications establish minimum acceptable quality for paint materials. Provide written certification from paint manufacturer that materials provided meet or exceed these minimums.
3. Manufacturer's products which comply with coating qualitative requirements of applicable Federal Specifications, yet differ in quantitative requirements, may be considered for use when acceptable to Architect. Furnish material data and manufacturer's certificate of performance to Architect for any proposed substitutions.

Color Pigments: Pure, non-fading, applicable types to suit substrates and service indicated.

PART 3 – EXECUTION

INSPECTION:

Applicator must examine areas and conditions under which painting work is to be applied and notify Contractor in writing of conditions detrimental to proper and timely completion of work. Do not proceed with work until unsatisfactory conditions have been corrected in a manner acceptable to Applicator. If work is begun before satisfactory conditions are met, than it shall be the Applicators' responsibility for the finish surfaces conditions.

Starting of painting work will be construed as Applicator's acceptance of surfaces and conditions within any particular area.

Do not paint over dirt, rust, scale, grease, moisture, scuffed surfaces, or conditions otherwise detrimental to formation of a durable paint film.

SURFACE PREPARATION:

General: Perform preparation and cleaning procedures in accordance with paint manufacturer's instructions and as herein specified, for each particular substrate condition.

1. Provide barrier coats over incompatible primers or remove and reprime as required. Notify Architect in writing of any anticipated problems in using the specified coating systems with substrates primed by others.
2. Remove hardware, hardware accessories, machined surfaces, plates, lighting fixtures, and similar items in place and not to be finish-painted, or provide surface-applied protection prior to surface preparation and painting operations. Remove, if necessary, for complete painting of items and adjacent surfaces. Following completion of painting of each space or area, reinstall removed items.
3. Clean surfaces to be painted before applying paint or surface treatments. Remove oil and grease prior to mechanical cleaning. Program cleaning and painting so that contaminants from cleaning process will not fall onto wet, newly-painted surfaces.

Cementitious Materials: Prepare cementitious surfaces of concrete, concrete block, cement plaster and cement-asbestos board to be painted by removing efflorescence, chalk, dust, dirt, grease, oils, and by roughening as required to remove glaze.

1. Determine alkalinity and moisture content of surfaces to be painted by performing appropriate tests. If surfaces are found to be sufficiently alkaline to cause blistering and burning of finish paint, correct this condition before application of paint. Do not paint over surfaces where

moisture content exceeds that permitted in manufacturer's printed directions.

2. Clean concrete floor surfaces schedules to be painted with a commercial solution of muriatic acid, or other etching cleaner. Flush floor with clean water to neutralize acid, and allow to dry before painting.

Wood: Clean wood surfaces to be painted of dirt, oil, or other foreign substances with scrapers, mineral spirits, and sandpaper, as required. Sandpaper smooth those finished surfaces exposed to view, and dust off. Scrape and clean small, dry, seasoned knots and apply a thin coat of white shellac or other recommended knot sealer, before application of priming coat. After priming, fill holes and imperfections in finish surfaces with putty or plastic wood-filler. Sandpaper smooth when dried.

1. Prime, stain, or seal wood required to be job-painted immediately upon delivery to job. Prime edges, ends, faces, undersides, and backsides of such wood, including cabinets, counters, cases, paneling.
2. When transparent finish is required, use spar varnish for backpriming.
3. Backprime all exposed exterior wood. Backprime paneling on interior partitions only where masonry, plaster, or other wet wall construction occurs on backside.
4. Seal tops, bottoms, and cut-outs of unprimed wood doors with a heavy coat of varnish or equivalent sealer immediately upon delivery to job.

Ferrous Metals: Clean ferrous surfaces, which are not galvanized or shop-coated, of oil, grease, dirt, loose mill scale and other foreign substances by solvent or mechanical cleaning.

1. Touch-up shop-applied prime coats wherever damaged or bare. Clean and touch-up with same type shop primer.

Galvanized Surfaces: Clean free of oil and surface contaminants with non-petroleum based solvent.

MATERIALS PREPARATION:

Mix and prepare painting materials in accordance with manufacturer's directions.

Maintain containers used in mixing and application of paint in a clean condition, free of foreign materials and residue.

Stir materials before application to produce a mixture of uniform density, and stir as required during application. Do not stir surface film into material. Remove film and, if

APPLICATION:

General: Apply paint in accordance with manufacturer's directions. Use applicators and techniques best suited for substrate and type of material being applied.

1. Paint colors, surface treatments, and finishes, are indicated in "schedules" of the contract documents.
2. Provide finish coats which are compatible with prime paints used.
3. Apply additional coats when undercoats, stains or other conditions show through final coat of paint, until paint film is of uniform finish, color and appearance. Give special attention to insure that surfaces, including edges, corners, crevices, welds, and exposed fasteners receive a dry film thickness not less than specified thickness.
4. Paint surfaces behind movable equipment and furniture same as similar exposed surfaces. Paint surfaces behind permanently-fixed equipment or furniture with prime coat only before final installation of equipment.
5. Paint interior surfaces of ducts, where visible through registers or grilles, with a flat, non-specular black paint.
6. Paint back sides of access panels, and removable or hinged covers to match exposed surfaces.
7. Finish exterior doors on tops, bottoms and side edges same as exterior faces, unless otherwise indicated.
8. Sand lightly between each succeeding enamel or varnish coat.
9. Omit first coat (primer) on metal surfaces which have been shop-primed and touch-up painted, unless otherwise indicated.

Scheduling Painting: Apply first-coat material to surfaces that have been cleaned, pretreated or otherwise prepared for painting as soon as practicable after preparation and before subsequent surface deterioration.

1. Allow sufficient time between successive coatings to permit proper drying. Do not recoat until paint has dried to where it feels firm, does not deform or feel sticky under moderate thumb pressure, and application of another coat of paint does not cause lifting or loss adhesion of the undercoat.

Minimum Coating Thickness: Apply materials at not less than manufacturer's recommended spreading rate, to establish a total dry film thickness as indicated or, if not indicated, as recommended by coating manufacturer.

Prime Coats: Apply prime coat where required to be painted or finished, and which has not been primed coated by others.

1. Recoat primed and sealed surfaces where there is evidence of suction spots or unsealed areas in first coat, to assure a finish coat with no burn-through or other defects due to insufficient sealing.

Pigmented (Opaque) Finishes: Completely cover to provide an opaque, smooth surface of uniform finish, color, appearance and coverage. Cloudiness, spotting, holidays, laps, brush marks, runs, sags, ropiness or other surface imperfections will not be acceptable.

Transparent (Clear) Finishes: Use multiple coats to produce glass-smooth surface film of even luster. Provide a finish free of laps, cloudiness, color irregularity, runs, brush marks, orange peel, nail holes, or other surface imperfections.

1. Provide satin finish for final coats, unless otherwise indicated.

Completed Work: Match approved samples for color, texture and coverage. Remove, refinish or repaint work not in compliance with specified requirements.

FIELD QUALITY CONTROL:

The right is reserved by Owner to invoke the following material testing procedure at any time, and any number of times during period of field painting:

1. Engage services of an independent testing laboratory to sample paint being used. Samples of materials delivered to project site will be taken, identified and sealed, and certified in presence of Contractor.
2. Testing laboratory will perform appropriate tests for any or all of following characteristics: Abrasion resistance, apparent reflectivity, flexibility, washability, absorption, accelerated weathering, dry opacity, accelerated yellowness, recoating, skinning, color retention, alkali resistance and quantitative materials analysis.

If test results show that material being used does not comply with specified requirements, Contractor may be directed to stop painting work, and remove non-complying paint; pay for testing; repaint surfaces coated with rejected paint; remove rejected paint from previously painted surfaces if, upon repainting with specified paint, the two coatings are non-compatible.

CLEAN-UP AND PROTECTION:

Clean-Up: During progress of work, remove from site discarded paint materials, rubbish, cans and rags at end of each day.

Upon completion of painting work, clean window glass and other paint-spattered surfaces. Remove spattered paint by proper methods of washing and scraping, using care not to scratch or otherwise damage finished surfaces.

Protection: Protect work of other trades, whether to be painted or not, against damage by painting and finishing work. Correct any damage by cleaning, repairing or replacing, and repainting, as acceptable to Architect.

1. Provide "Wet Paint" signs as required to protect newly painted finishes. Remove temporary protective wrappings provided by others for protection of their work, after completion of painting operations.

At completion of work of other trades, touch-up and restore all damaged or defaced painted surfaces.

EXTRA STOCK:

Deliver stock of maintenance materials to Owner. Furnish maintenance materials from same manufactured lot as materials installed and enclosed in protective packaging with appropriate identifying labels.

1. Paint: Furnish not less than one gallon for each type and color, applied.

EXTERIOR PAINT SCHEDULE

General: Provide the following paint systems for the various substrates, as indicated. Paint all new roof penetrations at roof areas.

Ferrous Metals: Gloss Alkyd Enamel: 2 Finish coats over primer with total dry film thickness of not less than 6.0 mils.

1st Coat:	S-W Pro-Cryl® Universal Acrylic Primer B66-310 Series (2.0 - 4.0 mils dry per coat)
2nd Coat:	S-W Industrial Enamel, B54 Series
3rd Coat:	S-W Industrial Enamel, B54 Series, (2-4 mils dry per coat)

Zinc-Coated Metal: Gloss Alkyd Enamel: 2 Finish coats over primer with total dry film thickness of not less than 2.5 mils.

1st Coat:	S-W Pro-Cryl® Universal Acrylic Primer B66-310 Series (2.0 - 4.0 mils dry per coat)
2nd Coat:	S-W Industrial Enamel, B54 Series
3rd Coat:	S-W Industrial Enamel, B54 Series, (2-4 mils dry per coat)

INTERIOR PAINT SCHEDULE

Concrete Masonry Units: Alkyd Semi-Gloss Enamel Finish: 2 Finish coats over filled surface with total dry film thickness of not less than 11.4 mils.

1st Coat:	S-W PrepRite® Block Filler, B25W25 (75-125 sqft / gal. – 16 mils wet, 8.0 mils dft)
2nd Coat:	S-W ProMar® 200 Latex Semi-Gloss, B31W2200 Series
3rd Coat:	S-W ProMar® 200 Latex Semi-Gloss, B31W2200 Series (4 mils wet, 1.3 mils dry per coat)

Drywall Systems: 3 coats with total dry film thickness not less than 3.5 mils

Drywall Walls and Ceilings: Interior Semi-Gloss Finish Acrylic Latex with dry film thickness not less than 3.8 mils.

1st Coat:	S-W PrepRite® 200 Latex Primer, B28W200 (4 mils wet, 1.2 mils dry)
2nd Coat:	S-W ProMar® 200 Latex Eggshell, B31W2200 Series
3rd Coat:	S-W ProMar® 200 Latex Eggshell, B31W2200 Series (4 mils wet, 1.3 mils dry per coat)

Ferrous Metal: Alkyd Gloss Enamel Finish: 2 Finish Coats over primer, with total dry film thickness not less than 6.0 mils.

1st Coat:	S-W Pro-Cryl® Universal Acrylic Primer B66-310 Series (2.0 - 4.0 mils dry per coat)
2nd Coat:	S-W Industrial Enamel, B54 Series
3rd Coat:	S-W Industrial Enamel, B54 Series, (2-4 mils dry per coat)

Zinc-Coated Metal: Alkyd Gloss Finish: 2 Coats over primer, with total dry film thickness not less than 6.0 mils.

1st Coat:	S-W Pro-Cryl® Universal Acrylic Primer B66-310 Series (2.0 - 4.0 mils dry per coat)
2nd Coat:	S-W Industrial Enamel, B54 Series
3rd Coat:	S-W Industrial Enamel, B54 Series, (2-4 mils dry per coat)

Epoxy Walls in Gloss Finish: 2 coats over filler with total dry film thickness not less than 14.0 mils. (Wet Areas, Kitchens, Etc)

1st Coat:	S-W Heavy Duty Block Filler, B42W46 (18 mils wet, 10 mils wet)
2nd Coat:	S-W Waterbased Tile-Clad® Epoxy Finish, B73-100 Series
3rd Coat:	S-W Waterbased Tile-Clad® Epoxy Finish, B73-100 Series (2-4 mils dry per coat)

Interior Wood Trim: Interior Semi-Gloss Acrylic Latex with dry film thickness not less than 3.8 mils.

1st Coat:	S-W PrepRite® 200 Latex Primer, B28W200 (4 mils wet, 1.2 mils dry)
2nd Coat:	S-W ProMar® 200 Latex Semi-Gloss, B31W2200 Series
3rd Coat:	S-W ProMar® 200 Latex Semi-Gloss, B31W2200 Series (4 mils wet, 1.3 mils dry per coat)

Stained Woodwork and Cabinets: Stained / Varnish Rubbed Finish: 3 Finish Coats over stain plus filler on open grain wood.

1st Coat:	S-W WoodClassics Oil Stain, A49 Series (450-500 sq ft/gal)
2nd Coat:	S-W WoodClassics Polyurethane Varnish, A67 Series
3rd Coat:	S-W WoodClassics Polyurethane Varnish, A67 Series (350-400 sq ft/gal)

END OF SECTION 09900

SECTION 10160 - TOILET PARTITIONS

PART 1 - GENERAL

RELATED DOCUMENTS:

Drawings and general provisions of Contract including General and Supplementary Conditions and Division 1 Specification sections apply to work of this section.

DESCRIPTION OF WORK:

Types of toilet partitions and screens required include the following:

1. Solid Color Reinforced Composite (SCRC) Substrate
2. Extent of toilet partitions is indicated on drawings.

RELATED SECTIONS

1. Section 05500 - Metal Fabrications, coordination with overhead supports; steel beams above finished ceiling to secure ceiling hung and floor-to-ceiling stiles.
2. Section 06100 - Rough Carpentry, coordination with blocking in walls to secure panels, wall posts and stiles.
3. Section 09510 - Ceilings, coordination with layout and installation.
4. Section 10800 - Washroom Accessories, for accessories.

QUALITY ASSURANCE:

Field Measurements: Take field measurements prior to preparation of shop drawings and fabrication where possible, to ensure proper fitting of work. However, allow for adjustments within specified tolerances wherever taking of field measurements before fabrication might delay work.

Coordination: Furnish inserts and anchorages which must be built into other work for installation of toilet partitions and related work; coordinate delivery with other work to avoid delay.

Accessibility Requirements: Comply with requirements applicable in the jurisdiction of the project, including but not limited to ADA and ICC/ANSI A117.1 requirements as applicable.

SUBMITTALS:

Product Data: Submit manufacturer's detailed technical data for materials, fabrication, and installation, including catalog cuts of anchors, hardware, fastenings, and accessories.

Shop Drawings: Submit shop drawings for fabrication and erection of toilet partition assemblies not fully described by product drawings, templates, and instructions for installation of anchorage devices built into other work.

Samples: Submit full range of color samples for each type of unit required. Submit 6" square samples of each color and finish on same substrate to be used in work, for color selections.

DELIVERY, STORAGE, AND HANDLING

Deliver and store products in manufacturer's unopened packaging bearing the brand name and manufacturer's identification until ready for installation.

Handling: Handle materials to avoid damage.

PROJECT CONDITIONS

Maintain environmental conditions (temperature, humidity, and ventilation) within limits recommended by manufacturer for optimum results. Do not install products under environmental conditions outside manufacturer's recommended limits.

SEQUENCING

Ensure that products of this section are supplied to affected trades in time to prevent interruption of construction progress.

WARRANTY

Manufacturer's Warranty: Manufacturer's standard 25 year limited warranty for panels, doors, and stiles against breakage, corrosion, delamination, and defects in factory workmanship. Manufacturer's standard 1 year guarantee against defects in material and workmanship for stainless steel door hardware and mounting brackets.

PART 2 – PRODUCTS

Manufacturers: The following manufacturers' products have been used to establish minimum standards for materials, workmanship and function:

Bobrick Wasroom Equipment, equal to SierraSeries 1090, Model #1096G.67
General Partitions
Global (ASI)

Bradley Partitions
Columbia Partitions

Equal products of other manufacturers may be used in the work, provided such products have been approved, by the Architect, not less than five (5) days prior to scheduled bid opening.

MATERIALS:

General: Provide materials which have been selected for surface flatness and smoothness. Exposed surfaces which exhibit pitting, seam marks, roller marks, stains, discolorations, telegraphing of core material, or other imperfections on finished units are not acceptable.

Solid Color Reinforced Composite (SCRC) Toilet Partitions:

1. Design Type:
   a. Standard Height
      1) Door/Panel Height: 58 inches (147 cm).
      2) Floor Clearance: 12 inches (30 cm)
2. Gap-Free Interlocking Design
3. Mounting:
   a. Floor to ceiling
      1) Stile Standard Height: As required 10'-0" (305 cm) maximum.

Solid Color Reinforced Composite (SCRC) Urinal Screens:

1. Mounting Configuration:
   a. Floor to ceiling.
      1) Stile Height: As required up to 10'-0" (305 cm) maximum
      2) Screen Height: 72 inches (183 cm)
      3) Floor Clearance: 4-5/16 inches (11 cm)
      4) Post Height: Up to 10'-0" (305 cm) maximum

Materials: Solid color reinforced composite (SCRC) material for stiles, panels, doors, and screens with Bobrick GraffitiOff coating, thermoset and integrally fused into homogenous piece; high density polyethylene (HDPE), high density polypropylene not acceptable.

1. Composition: Dyes, organic fibrous material, and polycarbonate/phenolic resins.
2. Surface Treatment: Non-ghosting, graffiti resistant surface integrally bonded to core through a manufacturing steps requiring thermal and mechanical pressure.
3. Edges: Same color as the surface.

4. Color:
   a. As selected by Architect from manufacturer's standard SierraSeries color range.

Performance Requirements:

1. Graffiti Resistance (ASTM D 6578): Passed cleanability test; 5 staining agents.
2. Scratch Resistance (ASTM D 2197): Maximum load value exceeds 10 kilograms.
3. Impact Resistance (ASTM D 2794): Maximum impact force exceeds 30 inch-pounds.
4. Smoke Developed Index (ASTM E 84): Less than 450.
5. Flame Spread Index (ASTM E 84): Less than 75.
6. National Fire Protection Association/International Building Code Interior
7. Uniform Building Code: Class II.

Finished Thickness:

1. Stiles and Doors: 3/4 inch (19 mm).
2. Panels and Screens: 1/2 inch (13 mm).

Stiles: Floor-anchored stiles furnished with expansion shields and threaded rods.

1. Leveling Devices: 7 gauge, 3/16 inches (5 mm) thick, corrosion-resistant, chromate-treated, double zinc-plated steel angle leveling bar bolted to stile; furnished with 3/8 inch (10 mm) diameter threaded rods, hex nuts, lock washers, flat washers, spacer sleeves, expansion anchors, and shoe retainers.
2. Stile Shoes: One-piece, 22 gauge (0.8 mm), 18-8, Type 304 stainless steel, 4 inch (102 mm) height; tops with 90 degree return to stile. One-piece shoe capable of adapting to 3/4 inch (19 mm) or 1 inch (25 mm) stile thickness and capable of being fastened (by clip) to stiles starting at wall line.

Wall Posts: Pre-drilled for door hardware, 18-8, Type 304, 16 gauge (1.6 mm) stainless steel with satin finish; 1 inch (25 mm) x 1-1/2 inches (38 mm) x 58 inches high (1473 mm).

Anchors: Expansion shields and threaded rods at floor connections as applicable. Threaded rods secured to supports above ceiling as applicable. Supports above ceiling furnished and installed as Work of Section 05500.

Hardware: Chrome-plated "Zamak", aluminum, extruded plastic hardware not acceptable.

1. Compliance: Operating force of less than 5 lb (2.25 kg).
2. Emergency Access: Hinges, latch allow door to be lifted over keeper from outside compartment on inswing doors.
3. Materials: 18-8, Type 304, heavy-gauge stainless steel with satin finish.
4. Doorstops: Prevents inswinging doors from swinging out beyond stile; on outswing doors, doorstop prevents door from swinging in beyond stile.
5. Fastening: Hardware secured to door and stile by through-bolted, theft-resistant, pin-in-head Torx stainless steel machine screws into factory-installed, threaded brass inserts. Fasteners secured directly into core not acceptable.
    a. Threaded Brass Inserts: Factory-installed; withstand direct pull force exceeding 1500 lb (680 kg) per insert.
6. Clothes Hooks: Projecting no more than 1-1/8 inch (29 mm) from face of door.
7. Door Hardware Type:
    a. Institutional Hardware
        1) Latching: 14 gauge (2 mm) sliding door latch, 11 gauge (3.2 mm) keeper; latch slides on a shock-resistant nylon track.
        2) Hinges: 16 gauge (1.6 mm) stainless steel, self-closing, 3 section hinges.
8. Fittings:
    a. Institutional Hardware
        1) Mounting Brackets: 18 gauge (1.2 mm) stainless steel and extend full height of panel.
        2) U-Channels: Secure panels to stiles.
        3) Angle Brackets: Secure stiles-to-walls and panels to walls.

PART 3 – EXECUTION

PREPARATION

Prepare substrates including but not limited to blocking and supports in walls and ceilings at points of attachment using methods recommended by the manufacturer for achieving the best result for the substrates under the project conditions.

1. Inspect areas scheduled to receive compartments for correct dimensions, plumbness of walls, and soundness of surfaces that would affect installation of mounting brackets.
2. Verify spacing of plumbing fixtures to assure compatibility with installation of compartments.

If preparation is the responsibility of another installer, notify Architect in writing of deviations from manufacturer's recommended installation tolerances and conditions.

Do not proceed with installation until substrates have been properly prepared with blocking and supports in walls and ceilings at points of attachment and deviations from manufacturer's recommended tolerances are corrected. Commencement of installation constitutes acceptance of conditions.

INSTALLATION

Install products in strict compliance with manufacturer's written instructions and recommendations, including the following:

1. Verify blocking and supports in walls and ceilings has been installed properly at points of attachment.
2. Verify location does not interfere with door swings or use of fixtures.
3. Use fasteners and anchors suitable for substrate and project conditions
4. Install units rigid, straight, plumb, and level.
5. Conceal evidence of drilling, cutting, and fitting to room finish.
6. Test for proper operation.

ADJUSTING, CLEANING AND PROTECTION

Adjust hardware for proper operation after installation. Set hinge cam on in-swinging doors to hold doors open when unlatched. Set hinge cam on out-swinging doors to hold unlatched doors in closed position.

Touch-up, repair or replace damaged products.

Clean exposed surfaces of compartments, hardware, and fittings.

END OF SECTION 10160

SECTION 10200 – LOUVERS

PART 1 - GENERAL

RELATED DOCUMENTS:

Drawings and general provisions of Contract including General and Supplementary conditions and Division 1 Specification sections apply to work of this section.

DESCRIPTION OF WORK:

Extent of louvers and vents is indicated on drawings, including indications of sizes and locations.

Types of louvers and vents include the following:

1. Fixed Wall Louvers.

QUALITY ASSURANCE:

Performance Requirements: Where louvers are indicated to comply with specific performance requirements, provide units whose performance ratings have been determined in compliance with Air Movement and Control Association (AMCA) Standard 500.

Comply with SMACNA "Architectural Sheet Metal Manual" recommendations for fabrication, construction details and installation procedures, except as otherwise indicated.

Field Measurements: Verify size, location and placement of louver units prior to fabrication, wherever possible.

Shop Assembly: Coordinate field measurements and shop drawings with fabrication and shop assembly to minimize field adjustments, splicing, mechanical joints and field assembly of units. Pre- assemble units in shop to greatest extent possible and disassemble as necessary for shipping and handling limitations. Clearly mark units for reassembly and coordinated installation.

SUBMITTALS:

Product Data: Submit manufacturer's specifications; certified test data, where applicable; and installation instructions for required products, including finishes.

Shop Drawings: Submit shop drawings for fabrication and erection of louver units and accessories. Include plans, elevations and details of sections and connections to adjoining work. Indicate materials, finishes, fasteners, joinery and other information to determine compliance with specified requirements.

PART 2 – PRODUCTS

MANUFACTURERS:

The following manufacturers' products have been used to established minimum standards for materials, workmanship and functions:

Arrow United Industries, Inc.
Airolite Co.
Reliable Metal Products, Inc.
Metal-Aire Louver Co.

Equal products of other manufacturers may be used in the work provided such products have been approved by the Architect not less than five (5) days prior to scheduled bid opening.

MATERIALS:

Frames and Blades: All fabricated of 6063-T5 or T6 extended aluminum with minimum thickness of .081.

Flashings: .040 Aluminum.

Fastenings: Use same material as items fastened, unless otherwise indicated. Fasteners for exterior applications may be hot-dip galvanized, stainless steel or aluminum. Provide types, gages and lengths to suit unit installation conditions. Use Phillips flat-head machine screws for exposed fasteners, unless otherwise indicated.

Anchors and Inserts: Use metal anchors and inserts for exterior installations and elsewhere as required for corrosion resistance. Use steel or lead expansion bolt devices for drilled-in-place anchors. Furnish inserts, as required.

Bituminous Paint: SSPC-Paint 12 (cold-applied asphalt mastic).

FABRICATION, GENERAL:

Provide louvers and accessories of design, materials, sizes, depth, arrangement, and metal thicknesses indicated, or if not indicated, as required for optimum performance with respect to airflow; water penetration; air leakage where applicable (for adjustable units, if any); strength; durability; and uniform appearance.

Fabricate frames including integral sills to suit adjacent construction with tolerances for installation, including application of sealants in joints between louvers and adjoining work.

Include supports, anchorages, and accessories required for complete assembly.

Provide sill extensions and loose sills made of same material as louvers, where indicated, or required for drainage to exterior and to prevent water penetrating to interior.

Maintain equal blade spacing, including separation between blades and frames at head and sill, to produce uniform appearance.

LOUVER SCREENS:

Provide screens for exterior louvers.

1. Provide frames consisting of U-shaped metal for permanently securing screen mesh. Frames shall be aluminum with aluminum 3/4"mesh bird screen mounted on inside of louvers.

METAL FINISHES:

General: Comply with NAAMM "Metal Finishes Manual" for finish designations and application recommendations, except as otherwise indicated. Apply finishes in factory after products are assembled. Protect finishes on exposed surfaces with protective covering, prior to shipment. Remove scratches and blemishes from exposed surfaces which will be visible after completing finishing process.

Baked Enamel Finish: AA-C12kC42R1X (cleaned with inhibited chemicals, conversions coated with an acid-chromate-fluoride- phosphate treatment and painted with organic coating specified below). Apply in strict accordance with manufacturers' specifications.

Organic Coating: Manufacturer's standard thermo setting acrylic enamel, 0.8 mil minimum dry film thickness.

PART 3 – EXECUTION

PREPARATION:

Coordinate setting drawings, diagrams, templates, instructions and directions for installation of anchorages which are to be embedded in concrete or masonry construction. Coordinate delivery of such items to project site.

INSTALLATION:

Locate and place louver units plumb, level and in proper alignment with adjacent work.

Use concealed anchorages wherever possible. Provide brass or lead washers fitted to screws where required to protect metal surfaces and to make a weathertight connection.

Form tight joints with exposed connections accurately fitted together. Provide reveals and openings for sealants and joint fillers, as indicated.

Repair finishes damaged by cutting, welding, soldering and grinding operations require for fitting and jointing. Restore finishes so there is no evidence of corrective work. Return items which cannot be refinished in field to shop, make required alterations, and refinish entire unit, or provide new units, at contractor's option.

Provide concealed gaskets, flashings, joint fillers, and insulations, and install as work progresses to make installations weathertight.

END OF SECTION 10200

SECTION 10410 - IDENTIFYING DEVICES

PART 1 - GENERAL

RELATED DOCUMENTS:

Drawings and general provisions of Contract including General and Supplementary Conditions and Division 1 Specification sections apply to work of this section.

DESCRIPTION OF WORK:

Extent of signs and plaque is indicated on the drawings.

Types of identifying devices specified in this section include the following:

1. Plaque – See Section 01011, Contingency Allowances
2. Project Sign – See Section 01011, Contingency Allowances
3. Room Signs (See Door Schedule)

QUALITY ASSURANCE:

Drawings and Specifications are based on one manufacturer's standard products. Another standard system of a similar and equivalent nature may be acceptable when the differences do not materially detract from the design concept or intended performance as judged solely by the Architect. Verify signage requirements with Owner and Architect before ordering.

SUBMITTALS:

Shop Drawings: Submit shop drawings for each type of device. Include large scale sections of typical members and other components. Provide dimensioned elevations. Show anchorages, grounds and reinforcement and indicate finishes.

PART 2 – PRODUCTS

Manufacturers: The following manufacturers' products have been used to establish minimum standards for materials, workmanship and function.

1. Plaque
   Andco
   Leeds Aluminum Letters
   Matthews
2. Room Signs
   American Slimline
   ASI Sign Systems

Best Manufacturing
BGS Corporation
First Source
Leeds Aluminum Letters

Equal products of other manufacturers may be used in the work, provided such products have been approved by the Architect, not less than five (5) days prior to scheduled bid opening.

Room Signs: Provide 6" x 8" high laminated plastic with raised lettering complying with the Americans with Disabilities Act (ADA), color as selected by the Architect. Use International Symbols of accessibility for identifying facilities as accessible. Letters and numerals shall be raised 1/32 in (0.8 mm) minimum, upper case, sans serif or simple serif type and shall be accompanied with Grade 2 Braille. Raised characters shall be at least 5/8 in (16 mm) high, but no higher than 2 in (50 mm). Pictograms shall be accompanied by the equivalent verbal description placed directly below the pictogram. The border dimension of the pictogram shall be 6 in (152 mm) minimum in height. Supply 20 letter characters per room sign, the Supplier will be required to meet with the Owner for exact wording for all room signs before preparation of the shop drawing submittal to the Architect for approval.

1. Tactile characters on signs shall be located 48 inches (1220 mm) minimum above the finish floor or ground surface, measured from the baseline of the lowest tactile character and 60 inches (1525 mm) maximum above the finish floor or ground surface, measured from the baseline of the highest tactile character. Where a tactile sign is provided at a door, the sign shall be located alongside the door at the latch side. Where a tactile sign is provided at double doors with one active leaf, the sign shall be located on the inactive leaf. Where a tactile sign is provided at double doors with two active leafs, the sign shall be located to the right of the right hand door. Where there is no wall space at the latch side of a single door or at the right side of double doors, signs shall be located on the nearest adjacent wall. Signs containing tactile characters shall be located so that a clear floor space of 18 inches (455 mm) minimum by 18 inches (455 mm) minimum, centered on the tactile characters, is provided beyond the arc of any door swing between the closed position and 45 degree open position. Mounting devices shall be concealed.

ARCHITECTURAL SIGNAGE (See Section 01011, Contingency Allowances)

Plaque: Provide 24" high x 30" wide, cast virgin bronze of standard alloy, hand tooled and chased, with raised letters and border, satin finish, and background pebbled finish and oxidized to a darker finish. Casting to be free of pits and blowholes, square and true with no warping. Border style to be single line, letters to be flat face classic design.

FABRICATION:

General: Fabricate signs to comply with requirements indicated including, dimensions, design and details, and quality, thickness and finish of materials. Use materials and shapes of sufficient thickness, with reinforcing, if needed, to produce sufficient flatness, free of "oil canning", and to impart sufficient strength for size, design and application indicated.

PART 3 – EXECUTION

INSTALLATION:

Install units plumb and level, in locations and with mounting shown. Securely attach to the supporting structure with concealed fasteners, in accordance with the manufacturer's installation instructions.

CLEANING AND PROTECTION:

At completion of the installation, clean surfaces in accordance with the manufacturer's instructions. Protect units from damage until acceptance by the Owner.

END OF SECTION 10410

SECTION 10520 - FIRE EXTINGUISHERS, CABINETS, AND ACCESSORIES

PART 1 - GENERAL

RELATED DOCUMENTS:

Drawings and general provisions of Contract including General and Supplementary Conditions and Division 1 Specification sections apply to work of this section.

DESCRIPTION OF WORK:

Definition: "Fire extinguishers" in this section refers to units which can be hand-carried as opposed to those which are equipped with wheels or to fixed fire extinguishing systems, unless otherwise indicated. Type of products in this section include:

1. Fire extinguishers.
2. Fire extinguisher cabinets.
3. Fire extinguisher wall brackets.

UL-Listed Products: Provide new portable fire extinguishers which are UL-listed and bear UL "Listing Mark" for type, rating, and classification of extinguisher indicated.

FM Listed Products: Provide new portable fire extinguishers which are approved by Factory Mutual Research Corporation for type, rating, and classification of extinguisher indicated and carry appropriate FM marking.

SUBMITTALS:

Product Data: Submit manufacturer's technical data and installation instructions for all portable fire extinguishers required. For fire extinguisher cabinets include roughing-in dimensions, and details showing mounting methods, relationships to surrounding construction, door hardware, cabinet type and materials, trim style and door construction, style and materials. Where color selections by Architect is required include color charts showing full range of manufacturer's standard colors and designs available.

PART 2 – PRODUCTS

Manufacturers: The following manufacturers' products have been used to establish minimum standards for materials, workmanship and function:

J.L. Industries.
Larsen's Mfg. Co.
Modern Metal Products

Equal products of other manufacturers may be used in the work provided such products have been approved by the Architect, not less than five (5) days prior to scheduled bid opening.

FIRE EXTINGUISHER CABINETS:

General: Provide fire extinguisher cabinets (FEC) where indicated, of suitable size for housing fire extinguishers of types and capacities indicated.

Construction: Manufacturer's standard enameled steel box, with trim, frame, door and hardware to suit cabinet type, trim style, and door style indicated. Weld all joints and grind smooth. Miter and weld perimeter door frames.

Cabinet Type: Suitable for mounting conditions indicated, of the following types:

1. Semi-Recessed: Cabinet box (tub) fire rated, semi-recessed in walls of sufficient depth to suit style of trim indicated. Cabinets located in corridors shall not protrude into the hall way more than 2-1/2".

Trim Style: Fabricate trim in one piece with corners mitered, welded and ground smooth.

1. Return Trim: For installation in walls where surface of surrounding wall finishes slightly back of exterior finished surface of frame and door of fire extinguisher cabinet, with overlapping trim attached to cabinet. Return trim shall be 2-1/2" deep with rolled trim.

Model equal to J. L. Industries Ambassador Steel

1. Model #1017 at non-rated walls with inside dimensions 24" x 10 1/2" x 6" Deep with F Door.
2. Model 1017FX at rated walls with inside dimensions 26 5/16” x 12 13/16” x 4” Deep with F Door.

Door Material and Construction: Manufacturer's standard door construction, of material indicated, coordinated with cabinet types and trim styles selected.

1. Enameled Steel: Manufacturer's standard finish, hollow steel door construction with tubular stiles and rails.

Door Style: Manufacturer's standard design as indicated below.

1. Full-Acrylic Panel: 1/4" thick clear acrylic.

Door Hardware: Provide manufacturer's standard door operating hardware of proper type for cabinet type, trim style, and door material and style indicated. Provide either lever handle with cam action latch, or door pull, exposed or concealed, and friction latch. Provide concealed or continuous type hinge permitting door to open 180°.

FACTORY FINISHING OF FIRE EXTINGUISHER CABINETS:

General: Comply with NAAMM "Metal Finishes Manual" for finish designations and application recommendations except as otherwise indicated. Apply finishes in factory after products are assembled. Protect cabinets with plastic or paper covering, prior to shipment.

Painted Finishes:

Preparation: Clean surfaces of dirt, grease, and loose rust or mill scale. Apply finish to all surfaces of fabricated and assembled units, whether exposed or concealed when installed, except those surfaces specified to receive another finish.

Baked Enamel Finish: Immediately after cleaning and pretreatment, apply manufacturer's standard baked enamel coating.

1. Provide colors or color matches as indicated or, if not indicated, as selected by Architect from manufacturer's standard colors.

FIRE EXTINGUISHERS:

General: Provide fire extinguishers for each extinguisher cabinet indicated, in colors and finishes selected by Architect from manufacturer's standard which comply with requirements of governing authorities.

1. Abbreviations indicated below to identify extinguisher types related to UL classification and rating system and not, necessarily, to type and amount of extinguishing material contained in extinguisher.

Multi-Purpose Dry Chemical Type (4A-80BC-FE): UL-rated 4-A; 80-BC, l0 lb. nominal capacity, in enameled steel container, for Class A, Class B and Class C fires, equal to Cosmic 10E by J. L. Industries. “Start –Up Tags” for each fire extinguisher must be provided and approved by Local Fire Department before Final Inspection.

Cooking Media Wet Chemical: Equal to Saturn Extinguishers by J. L. Industries, Class K Wet Chemical. Low “pH” potassium acetate solution is discharged in a fine mist that provides excellent range while preventing splashing and creating an effective saponification foam-type blanket necessary for suppressing liquid cooking media fires. Stainless steel cylinder with protective nozzle tip orifice seal and non-metallic nozzle tip finger guard. Industry standard horn and nozzle design. Name plate shows only the class “K” symbol. Capacity: 6 liter (1.8 gallon), 2.-1/2 gallon.

PART 3 – EXECUTION

INSTALLATION:

Install items included in this section in locations and at mounting heights indicated, or if not indicated, at heights to comply with applicable regulations of governing authorities.

1. Prepare recesses in walls for fire extinguisher cabinets as required by type and size of cabinet and style of trim and to comply with manufacturer's instructions.
2. Securely fasten mounting brackets and fire extinguisher to structure, square and plumb, to comply with manufacturer's instructions.
3. Where exact location of surface-mounted cabinets and bracket-mounted fire extinguishers is not indicated, locate as directed by Architect.

IDENTIFICATION:

Identify fire extinguisher in cabinet with lettering spelling "FIRE EXTINGUISHER" painted on door by silk-screen process. Provide lettering on door as indicated, or if not indicated, as selected by Architect from manufacturer's standard letter sizes, styles, colors and layouts.

END OF SECTION 10520

SECTION 11400 - FOOD SERVICE EQUIPMENT

PART 1 - GENERAL

RELATED DOCUMENTS

Drawings and general provisions of the Contract including General and Supplementary Conditions and Division 1 Specification Sections apply to this Section.

SUMMARY

Owner-Furnished Equipment: Where indicated, the Owner will furnish equipment items and the General Contractor shall make final electrical and mechanical and plumbing connections.

Scope:

All new food service equipment to be furnished by the Owner and connection by the Contractor prior to the building being completed.

The Owners Equipment Contractor is responsible for delivery, assembly, erection and leveling all equipment included herein at locations shown on plans. He shall leave same with outlets for connections as standardized by the various food service equipment manufacturers.

The General Contractor shall make final steam, plumbing, electric, and ventilating connections.

The Owners Equipment Contractor shall deliver to the General Contractor all plumbing, steam fitting and electrical parts that are furnished loose as a part of the equipment.

The Owners Equipment Contractor shall furnish trim of same material as body of fixtures where necessary to create sanitary conditions and finished appearance.

The Owners Equipment Contractor shall clean up all debris made by his workman and remove same form premises. Equipment is to be cleaned just prior to Owner's acceptance so as to be free from dirt and dust accruing from building conditions.

The Owners Equipment Contractor shall provide to the General Contractor requirements for access and maintenance clearances, water and drainage, power or fuel, and service-connections including roughing-in dimensions and as follows:

1. Details of wiring for power, signal, and control systems and differentiating between manufacturer-installed and field-installed wiring.
2. Details of piping systems and differentiating between manufacturer-installed and field-installed piping.

Work by the General Contractor:

All plumbing, steam, electrical and ventilation work, both material and labor, required to connect this equipment furnished by the Owner unless specifically called for on the drawings. The work done by this Contractor to include roughing-in to points indicated on mechanical plan and final connecting from rough-in point to various pieces of equipment requiring such connections and the supplying of all necessary materials and labor for this work except as hereinafter noted.

All traps, grease traps, tail pieces, valves, stops, shutoffs and fittings necessary, are to be furnished and installed by the mechanical contractor, unless specifically called for under item specifications.

All steam traps, valves, shutoffs, condensate pumps, and fittings necessary are to be furnished and installed under mechanical contract.

All line and disconnect switches, safety cut outs, control panels, fuse boxes, or other electrical controls, fittings and connections not furnished as a standard part of the fixture by the manufacturer, to be furnished and installed this Contractor. Starting switches provided by Equipment Contractor and furnished loose as standard by food service equipment manufacturers (other than special fabricated items) to be mounted and wired complete under electrical contract.

Any sleeves or conduit required for refrigeration tubing lines furnished and installed under mechanical contractor.

Plumbing and steamfitting contractors to see that all lines are flushed free of foreign matter before connecting fixtures.

Testing and Operating Instructions:

After all utility connections to equipment are made by this Contractor, conduct a final test of equipment in presence of Architect, Owner or their duly authorized representative.

SCHEDULE OF EQUIPMENT

The following food service equipment listed herein to be furnished by the Owner was used to establish minimum requirements for basis of design layout and for electrical and mechanical loads

See the attached cut sheets at the end of this Section.

PART 3 – EXECUTION

EXAMINATION

Examine areas and conditions, with Installer present, for compliance with requirements for installation tolerances, service-utility connections, and other conditions affecting installation and performance of food service equipment.

Examine roughing-in for piping, mechanical, and electrical systems to verify actual locations of connections before installation.

PROTECTING

Provide final protection and maintain conditions, in a manner acceptable to manufacturer and Installer that ensure food service equipment is without damage or deterioration at the time of Substantial Completion.

END OF SECTION 11400

VICTORY
110 Woodcrest Road, Cherry Hill, NJ 08003-3648
856.428.4200 • 800.523.5008 • Fax: 856.428.7299
www.victoryrefrigeration.com • email: sales@victoryrefrigeration.com

PROJECT: OWNER FURNISHED
LOCATION: CONTRACTOR
ITEM #: INSTALLED AT
QUANTITY: ROOM 106

ULTRASPEC™ SERIES

DUAL TEMPERATURE REACH-IN REFRIGERATORS/FREEZERS

V-TEMP CONTROL™

STANDARD FEATURES

- V-TEMP™ Electronic Control System
- High Performance, Balanced, Top-Mounted Refrigeration
- R-134a and R-404A Refrigerants
- Energy Efficient, EC Evaporator Fan Motor(s) (2-Section only)
- Plasticized Evaporator Fin Coils
- Non-Electric Condensate Evaporator
- Foamed-in-Place Polyurethane Insulation
- Insulated Partition Wall Separates Compartments
- Heavy Duty Cylinder Locks
- Self-Closing Doors with 120° Hold Open Feature
- Cam-Lift Hinges, Guaranteed for Life
- Ergonomically Correct Door Handles, Guaranteed for Life
- S, SA Series have 6" High, Adjustable Stainless Steel Legs
- A Series has 6" High Standard Black Legs
- Hinged Front Shroud Makes Condenser Cleaning Easier
- Proximity Door Switch Activates Interior Lighting
- One Piece, Snap-In Magnetic Door Gasket(s)
- Anti-Condensate Door Perimeter Heaters
- Stainless Steel Interior Door Liner
- Energy Saving Thermal Breaker Caps, Guaranteed for Life
- Three (3) Epoxy Wire Shelves per Cabinet Section (2-Section Models)
- One (1) Epoxy Wire Shelf per Cabinet Section (1-Section Models)
- Cord and Plug (see electrical data for details)

OPTIONS AND ACCESSORIES

- Full and Half-Size Glass Doors
- Remote Models
- Correctional Facilities Options
- Stainless Steel Case Back and Shroud
- Stainless Steel Shelves
- 6" Overall Height Casters (Set of 4)
- Exterior Laminate Décor
- Adjustable Tray and Pan Slides
- Optional Voltages
- ***FLEXTEMP*** Performance Mode (Refrigerator only)
- USB Data Recorder
- RS-485 Serial Interface

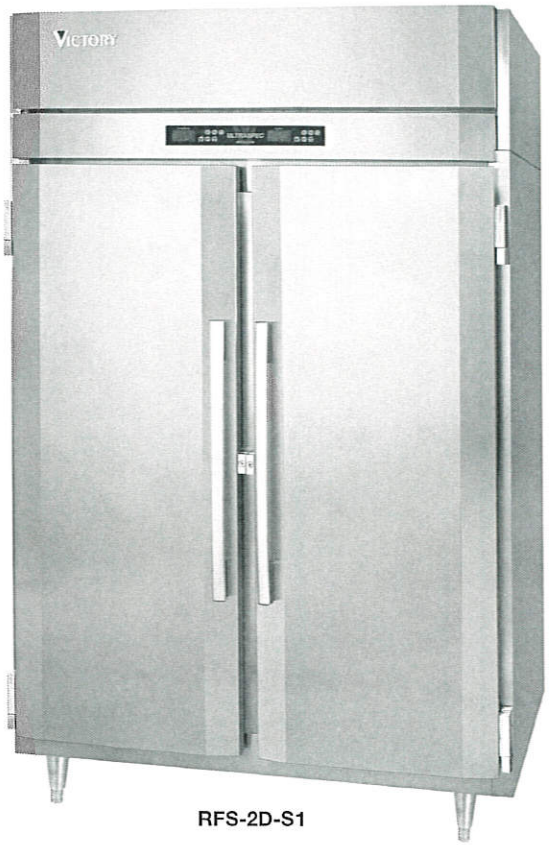

RFS-2D-S1

MODELS

	LONG-DOOR	HALF-DOOR
S SERIES — Stainless Steel Exterior and Interior	RFS-2D-S1	RFS-1D-S1-HD RFS-2D-S1-HD
SA SERIES — Stainless Steel Exterior and Aluminum Interior	RFSA-2D-S1	RFSA-1D-S1-HD RFSA-2D-S1-HD
A SERIES — Stainless Steel Front and Doors, Aluminum Ends and Interior	RFA-2D-S1	RFA-1D-S1-HD RFA-2D-S1-HD

1 UNIT

NOTE: Not all marks refer to all models

3 Year Parts and Labor Warranty • 5 Year Compressor Warranty

Victory Refrigeration specification sheets are available online at **www.victoryrefrigeration.com**

APPROVALS:

DUAL TEMPERATURE REACH-IN REFRIGERATORS/FREEZERS

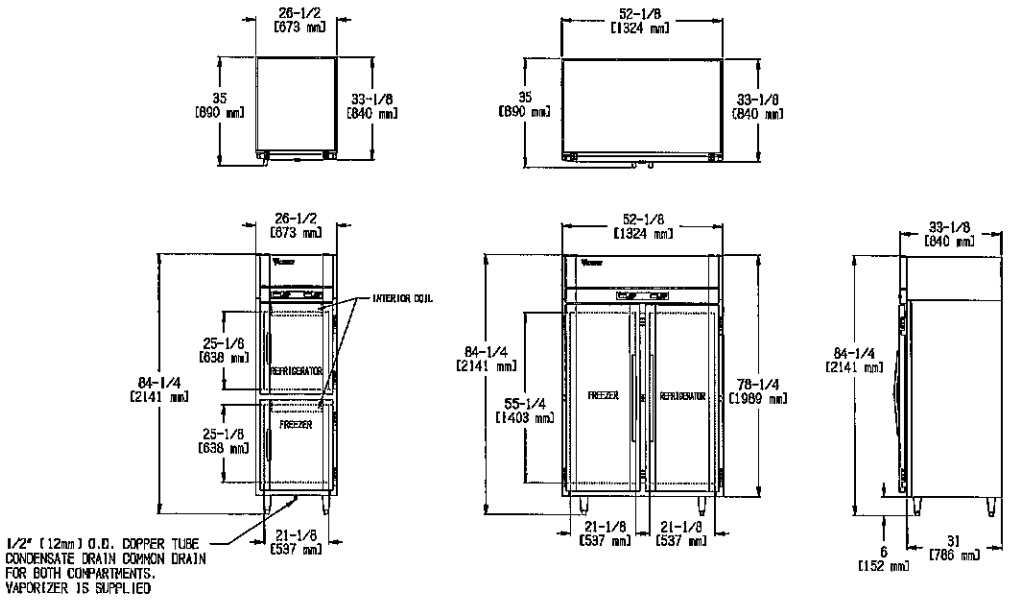

We reserve the right to change specifications and product design without notice. Such revisions do not entitle the buyer to corresponding changes, improvements, additions or replacements for previously purchased equipment.

Dimensional tolerances +/- ¼". Metric dimensions (MM)

CABINET CONSTRUCTION
The cabinet front and doors are constructed of heavy gauge, polished stainless steel to maintain an attractive appearance after years of heavy use. Polyurethane foam insulation throughout ensures the ultimate in energy efficiency. The front shroud lifts up for easy access when cleaning the condenser unit.

DOOR CONSTRUCTION
The doors are heavy gauge, polished stainless steel with a stainless steel interior liner. Each door is provided with a cylinder lock and ergonomically correct vertical handle. The door hinges are self-closing and have a hold-open feature at 120° which facilitates product loading. Proximity switches energize the recessed interior incandescent lighting (top cabinet only for single section models) when the door is opened. Humidity control wires around the door jamb prevent condensation from forming on the front of the cabinet in high humidity environments. The wires are concealed by a high impact, non-conducting thermal breaker cap.

REFRIGERATION SYSTEM
High efficiency, air-cooled, self-contained refrigeration systems are provided. The evaporator coils for both compartments are ceiling mounted on the single section model. The two section model has a top mounted system with the evaporator coils located outside the food storage zone. Environmentally friendly R-134a for the refrigerator and R-404A for the freezer are efficiently metered by capillary systems providing a constant, safe operating temperature and quick "recovery" under the most demanding conditions. The hermetically sealed systems are designed to operate at 38°F and 0°F. Each cooling coil has plasticized fin coils to resist food acids and dual-speed EC fan motor(s) for greater cooling capacity and efficiency. All condensate water is disposed of automatically by the condensate vaporizer on the single section and disposed of automatically with the non-electric hot gas disposal system on the two section model.

INTERIOR STORAGE ARRANGEMENTS
Shelves are adjustable in one inch increments. A wide door opening allows for the use of a variety of optional pan slide configurations including 18" x 26" and 12" x 20" pans.

V-TEMP™ CONTROL SYSTEM
The easy to use V-TEMP™ Control is provided standard. This durable, water resistant microprocessor monitors and controls the entire temperature maintenance process. It includes an ON/OFF switch, manual defrost, interior light switch, LED temperature indicator in °C or° F, a HI/LO audio/visual temperature alarm , power supply interruption, door ajar and "clean condenser" alarms. A manager's "lock-out" feature is provided to safeguard pre-determined control settings. A HAACP Event Indicator/Memory feature announces and records up to nine (9) alarm events.Unique to the V-TEMP™ are two standard modes of operation:

▶ **SUPERCOOL** - Provides a lower "set-point" refrigeration condition for a set period of time when food has just been loaded into the refrigerator and needs to be quickly brought back down to a safe temperature.

▶ **ENERGY SAVING** - The cabinet automatically reverts to the energy saving mode when there are no door openings for four hours.

A **FLEXTEMP** mode of operation is available as an option. **FLEXTEMP** provides the ability to select a unique temperature from 28°F to 40°F. This optional feature is ideal for seasonal menu changes and items with specific temperature requirements for dairy, meat, fish or poultry.

NOTE: FLEXTEMP mode is only available for the refrigerator compartment.

CHARACTERISTICS	1 SECTION	2 SECTION
DIMENSIONAL DATA		
Capacity Net (cubic ft.) Ref.	8.1	21.3
Capacity Net (cubic ft.) Frzr.	8.1	21.3
Width, Overall (in.)	26 ½	52 ⅛
Depth, Overall (inc. handles)	35	35
Depth, Door(s) Open 90° (in.)	56 ¾	56 ¾
Clear Door Width (in.)	21 ⅛	21 ⅛
Clear Half-Door Height (in.)	25 ⅜	25 ⅜
Clear Full-Door Height (in.)	N/A	55 ¼
Height Overall (inc. 6" legs)	84 ¼	84 ¼
No. Full/Half Doors	2H	2F, 4H
No. of Shelves	2	6
Shelf Area (square ft.)	10.2	33.2
ELECTRICAL DATA		
Cabinet Voltage	115/60/1	115/60/1
Feed Wires Ref.	2	2
Feed Wires Frzr.	2	2
Condensing Unit Voltage Ref.	115/60/1	115/60/1
Condensing Unit Voltage Frzr.	115/60/1	115/60/1
Total Amperes, Refrigerator	11.1	6.4
Total Amperes, Freezer	6.4	8.4
NEMA Plug	5-15P (2)	5-15P (2)
REFRIGERATION DATA		
Condensing Unit Size, Refrigerator	¼ HP	¼ HP
Condensing Unit Size, Freezer	⅓ HP	⅓ HP
Refrigerant, Refrigerator	R-134a	R-134a
Refrigerant, Freezer	R-404A	R-404A

NOTE: Plug style, voltage and full load amps may vary depending on certain options selected such as optional voltages and compressor upgrades.

REMOTE APPLICATIONS: See form V-RRDS1 for details of remote refrigeration characteristics by model

CRATED DIMENSIONS & WTS.	HT.	WIDTH	DEPTH	FT³	LBS
ONE SECTION	84 ½	36	43	75.70	425
TWO SECTION	84 ½	59 ¼	43	124.59	550

NOTE: In order to provide peak operating performance the cabinet must have a 2 inch all around clearance and 12 inches above the top of the condensing unit. This ensures an adequate air supply and space for routine maintenance and/or service if required.

Copyright March 2013
Printed in USA

Item # OWNER FURNISHED CONTRACTOR INSTALLED AT

Job ROOM 106

METRO® HEATED BANQUET CABINETS

One-Door Versions

Control to serve meals hot and on time, every time.

Efficient: Economic one-door versions are designed to hold up to 11" diameter covered plates and are available in smaller capacities.

Versatile Thermal Performance: Standard Electric and Quad-Heat™ Dual Fuel thermal systems available.

Superior Thermal Stratification: Available Quad-Heat™ Dual Fuel canned fuel system utilizes corner chimneys to provide even thermal stratification, channeling warm air throughout the cabinet, surrounding meals with uniform heat. By utilizing the "dead" space in the corners, Quad-Heat™ maximizes the volume of the cabinet while minimizing the space it requires. Easy-to-access drawers allow canned fuel to be monitored and replaced without opening doors.

Control: Three-Point-Control Handle is designed with the user in mind. Ergonomically designed for pushing and pulling from both the side and the front. Optional Swing-Up Handle provides additional control and visibility when moving the cabinet.

Hands-Free Access: Kick-Latch provides access to the cabinet when hands are full.

Maneuverability: Optional swivel lock caster system allows cabinet to be moved in-and-out-of-line without "dragging". Rigid casters can be made to swivel for movement in tight spaces and automatically switch back to rigid when needed for moving down halls.

Reliability: High-performance 1650 watt heating module is easy to remove, without tools, for scheduled cleaning and service. Side-mounted power cord is easy-to-access and does not obstruct doors.

Intelligence: All important information is found in one easy-to-use, easy-to-read place.

- Time — Exclusive multi-function count-up/count-down timer.
- Temperature — Accurate and easy to read thermometer.
- Contents — Dual function "white-board" and clip-board for labeling.

Energy Star: All Metro Heated Banquet Cabinet models are Energy Star.

MBQ-180-QH — 180 Plate Capacity with Quad-Heat™ Dual Fuel

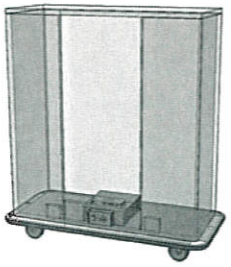

Standard Electric Thermal System

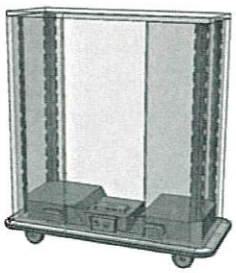

Quad-Heat™ Dual Fuel Thermal System

Options and Accessories:

- Swing-Up Handle
- Travel Latch
- 8" Casters
- 8" Pneumatic Casters
- Swivel Lock Casters
- 8" Swivel Lock Casters
- Swing-Up Shelf Accessory
- 220 Volt, 50/60 Hz Version
- Covered Plate Carrier
- Open Plate Carrier
- 20 amp Plug

InterMetro Industries Corporation
North Washington Street
Wilkes-Barre, PA 18705
www.metro.com

EMERSON Storage Solutions

Job _____

METRO® HEATED BANQUET CABINETS

One-Door Versions

Specifications

- **Construction:** Welded, reinforced, stainless steel "edgeless" construction.
- **Cabinet Materials:** Type 304 stainless steel; 20-gauge polished exterior; 22-gauge interior.
- **Casters:** Heavy-duty, 6" diameter polyurethane casters with 2" tread width. Ball bearing swivel race and roller bearing axle with zerk grease fittings. Plate-mounted and staggered. Two rigid and two swivel with brakes.
- **Bumper:** Non-marking, solid vinyl bumper mounted to $^1/_8$" thick aluminum support channel.
- **Insulation:** Full, 1" thick high-density fiberglass. R Value=4.2.
- **Doors:** Insulated, welded, double-panel Type 304 stainless steel door; 20-gauge polished exterior; 22-gauge interior.
- **Hinges:** Lift-off, double hinged, with long-life nylon bearings.
- **Gaskets:** High temperature, cabinet-mounted, santoprene gaskets.
- **Latches:** High-strength magnetic pull latch and bottom mounted kick latch on door.
- **Handle:** Unique Three-Point-Control Handle. 1" diameter stainless steel construction with integral cord wrap standoffs.
- **Shelves:** Nickel-chrome plated, removable wire shelves. Heavy-duty, non-flattening shelf brackets.
- **Thermometer:** Easy-to-read analog thermometer with remote protected sensing bulb.
- **Timer:** Dual-function count-up and count-down timer.
- **Content Labeling:** Multi-function white-board/clipboard for use with dry-erase marker or any size paper label.
- **Size and Capacity:** One-door models accomodate up to 11" covered plates (diameter of cover) and full-size sheet pans side-to-side on shelves.
- **Electric Heating System:** Bottom, mounted heat module. Dial thermostatic control. High-temperature ball bearing blower motor. 1650 watt, 120 VAC, 13.8 amp, 15 ft., 3-wire lead cord with NEMA 5-15P plug (20 amp for CUL). Removable without tools.
- **Canned Heat Fuel System — Quad-Heat™ Dual Fuel:** Bottom-mounted drawers with heat conduction baffles in combination with corner chimneys. Anti-tip drawers hold cans securely. Vented for proper combustion.
- **Thermal Performance:** Electric pre-heat to 170° F (76° C), actual internal temperature, in approximately 30 minutes (based on 120 capacity size).

Metro Heated cabinets are for hot food holding applications only.

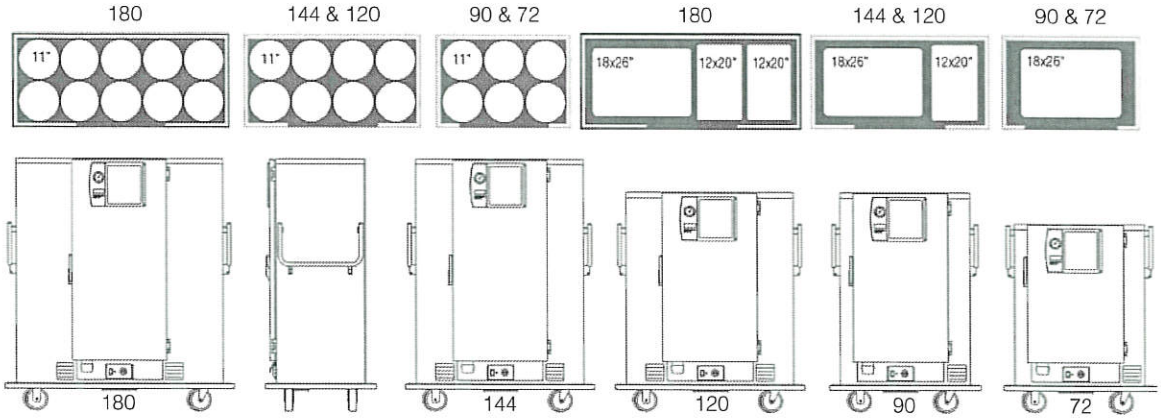

Cat. No.	Thermal System	Plate Capacity: Stacked	Plate Capacity: Covered Carrier	Plate Capacity: Open Carrier	Covered Plates Stacked High	Shelf Size (in.)	Shelves	Shelf Clearance (in.)	Height (in.)	Depth (in.)	Width (in.)	Shipping Weight (lbs.)
MBQ-180	Standard	180	180	150	6	55x22	3	17	69.5	30.625	63.625	521
MBQ-180-QH	Quad-Heat	180	180	150	6	55x22	3	17	69.5	30.625	63.625	556
MBQ-144	Standard	144	144	120	6	44x22	3	17	69.5	30.625	52.625	421
MBQ-144-QH	Quad-Heat	144	144	120	6	44x22	3	17	69.5	30.625	52.625	456
MBQ-120	Standard	120	120	96	5	44x22	3	14	60.5	30.625	52.625	408
MBQ-120-QH	Quad-Heat	120	120	96	5	44x22	3	14	60.5	30.625	52.625	443
MBQ-90	Standard	90	90	72	5	33x22	3	14	60.5	30.625	41.625	327
MBQ-90-QH	Quad-Heat	90	90	72	5	33x22	3	14	60.5	30.625	41.625	362
MBQ-72	Standard	72	72	60	6	33x22	2	17	52.0	30.625	41.625	302
MBQ-72-QH	Quad-Heat	72	72	60	6	33x22	2	17	52.0	30.625	41.625	337

2 UNITS

NOTE: Capacities based on a maximum plate and cover height of $2^3/_4$".

All Metro Catalog Sheets are available on our Web Site: **www.metro.com**

InterMetro Industries Corporation
North Washington Street, Wilkes-Barre, PA 18705
Phone: 570-825-2741 • Fax: 570-825-2852
For Product Information Call: 1-800-433-2232

L03-247
Printed in U.S.A. Rev. 3/09

Information and specifications are subject to change without notice. Please confirm at time of order.
Copyright © 2003 InterMetro Industries Corp.

Manitowoc

NEO™

NEO™ 310 Undercounter Ice Machines

NEO™ 310 Undercounter Ice Machines

Models

- ☐ UR-0310A
- ☐ UD-0310A
- ☐ UD-0310W
- ☐ UY-0310A
- ☐ UY-0310W

ENERGY STAR PARTNER

U-310

- Up to 304 lbs (138 kg) of daily ice production
- 30" (76.20 cm) wide, 28.00" (67.31 cm) deep, and 38.50" (82.55 cm) high on 6" (15.24 cm) legs
- 100 lb. (45.35 kg) ice storage capacity

NEO undercounter ice machines are designed to provide ice right where you need it – within reach. Improvements in **Performance**, **Intelligence** and **Convenience** make your ice machine easy to own and less expensive to operate.

Performance – NEO produces more ice than ever before while using less water and energy. The storage bin provides industry leading capacity.

Intelligence – NEO provides feedback with full bin and service indicators. Delay function allows you to pause your machine for slow periods or days when you're closed.

Convenience – NEO offers a forward-sliding storage bin for easy access to refrigeration components without having to move the entire ice machine. Smooth, sealed food-zone with removable water trough, distribution tube, and damper door for faster cleaning. AlphaSan added to key internal components.

Available **LuminIce™ Growth Inhibitor** extends cleaning intervals by reducing yeast and bacteria growth keeping your ice machine cleaner, longer.

COMMERCIAL WARRANTY

ICE MAKER	EVAPORATOR	COMPRESSOR
3 YEAR	5 YEAR	5 YEAR PARTS
PARTS AND LABOR		3 YEAR LABOR

Specifications

BTU Per Hour:
4,600 (average)
5,450 (peak)

Compressor:
Nominal rating: .75 HP

Cupra-Nickel Condenser:
(Water-cooled models)
Adds protection from corrosive water elements.

Operating Limits:

- Ambient Temperature Range: 40˚ to 110˚F (4.4˚ to 43.3˚C)
- Water Temperature Range: 45˚ to 90˚F (4.4˚ to 32.2˚C)
- Water Pressure Ice Maker Water In:
  Min. 20 psi (137.9 kPA)
  Max. 80 psi (551.1 kPA)
- Condenser Inlet Water In: (Water-cooled only)
  Min. 20 psi (137.9 kPA)
  Max. 150 psi (1,034.2 kPA)

Ice Shape

Half Dice
⅜" x 1⅛" x ⅞"
(.95 x 2.86 x 2.22 cm)

Dice
⅞" x ⅞" x ⅞"
(2.22 x 2.22 x 2.22 cm)

Regular
1⅛" x 1⅛" x ⅞"
(2.86 x 2.86 x 2.22 cm)

Ice Machine Electric

115/60/1. (208-230/60/1 and 230/50/1 available.) 115/60/1 ice machines are factory pre-wired with a 6' (180 cm) power cord and NEMA 5-15P-plug configuration. 208-230/60/1 ice machines are factory pre-wired with a 6' (180 cm) power cord only, no plug is supplied.

Total Amps:
115/60/1 Air-cooled and Water-cooled: 10 amps

208-230/60/1 Air-cooled: 4.5 amps

Maximum fuse size:
Air and Water-cooled: 15 amps
HACR-type circuit breakers can be used in place of fuses.

CALIFORNIA LOW LEAD QUALIFIED — Conforms to NSF 61 Annex G

AHRI CERTIFIED®

NSF c UL US LISTED CE

AutoQuotes

COMPANY WITH QUALITY SYSTEM CERTIFIED BY DNV = ISO 9001:2008 =

2110 South 26th Street
PO Box 1720
Manitowoc, WI 54221-1720 USA

Tel: 1.920.682.0161
Fax: 1.920.683.7589

www.manitowocice.com

Manitowoc

NEO™ 310 Undercounter Ice Machines

U-310

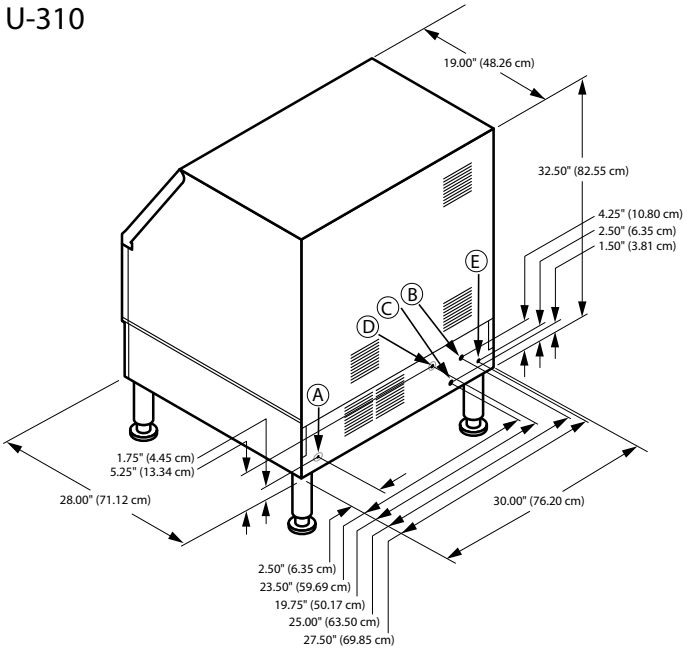

Installation Note *Recommended clearance for top, sides, and back is 5" (12.7 cm) however, there is no minimum clearance required.*

- (A) Electrical Entrance
- (B) 3/8" (0.95 cm) F.P.T. Ice Making Water Inlet
- (C) 1/2" (1.27 cm) F.P.T. Minimum Water Condenser Outlet (water-cooled units)
- (D) 3/8" (0.95 cm) F.P.T. Water Condenser Inlet (water-cooled units)
- (E) 1/2" (1.27 cm) F.P.T. Ice Bin Drain

Specifications

Model	Ice Shape	Ice Production 24 Hours: 70°Air/50°F Water 21°Air/10°C Water		Ice Production 24 Hours: 90°Air/70°F Water 32°Air/21°C Water		Power kWh/ 100 lbs. @ 90°/70°F 32°/21°C	Potable water usage gal/100 lbs. ice @90/70°F	ENERGY STAR®
UR-0310A	regular	292 lbs	132 kg	226 lbs	103 kg	8.3	23.5	★
UD-0310A	dice	304 lbs	138 kg	235 lbs	107 kg	8.3	23.5	★
UD-0310W	dice	271 lbs	123 kg	250 lbs	114 kg	6.1	23.5	NA
UY-0310A	half-dice	304 lbs	138 kg	235 lbs	107 kg	8.3	23.5	★
UY-0310W	half-dice	271 lbs	123 kg	250 lbs	114 kg	6.1	23.5	NA
Water-cooled condensers Water Usage / 100 lbs/45.4 kgs. of Ice: 179 gal./677 liters								

Air Flow

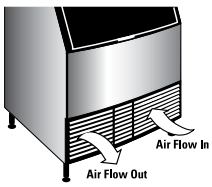

Air in right, air out left, no side vents. Great for installation under countertops and next to other equipment.

Removable Bin

Air Filter

Simple, tool-free removal for quick access during routine cleaning and maintenance.

5071B ©2014 Manitowoc 6/14 Continuing product improvement may necessitate change of specifications without notice.

2110 South 26th Street
PO Box 1720
Manitowoc, WI 54221-1720 USA

Tel: 1.920.682.0161
Fax: 1.920.683.7589
www.manitowocice.com

FSC www.fsc.org MIX Paper from responsible sources FSC® C016863

TB3Q

31.0" x 22.0" x 11.6"
(78.7cm x 55.9cm x 29.5cm)

- Has adjustable steep time for more control over flavor extraction
- Brews directly into any style portable server
- Separate inlet for sweetener - use existing CO2 systems or external 3rd party pump for sweetener delivery
- SplashGard® funnel deflects hot liquids away from the hand

Servers and airpots sold separately

Agency:

Specifications

Product #: 36700.0059

Water Access: Plumbed

Finish: Stainless

Funnel: Translucent Tea Funnel

Additional Features

90 oz Concentrate

Quickbrew Funnel Tip

Quick Brew

Electrical & Capacity

Volts	Amps	Watts	Cord Attached	Plug Type	8oz cups/hr 236ml cups/hr	Input H²O Temp.	Phase	# Wires plus Ground	Hertz
120	14.4	1730	Yes	NEMA 5-15P	523	60°F (15.5°C)	1	2	60

Plumbing Requirements

PSI	kPa	Fitting Supplied	Water Flow Required (GPM)
20-90	138-621	1/4" Male Flare Fitting	-

CAD Drawings

2D	Revit	KLC
●		

BUNN® reserves the right to change specifications and product design without notice. Such revisions do not entitle the buyer to corresponding changes, improvements, additions or replacements for previously purchased equipment.
For most current specifications and other info visit bunn.com.

Created on:
03/03/2016

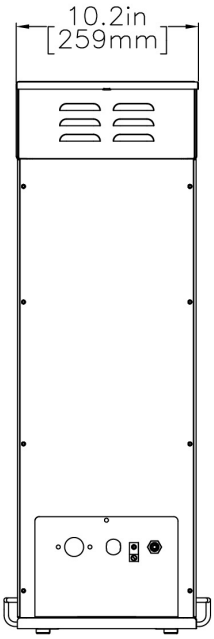

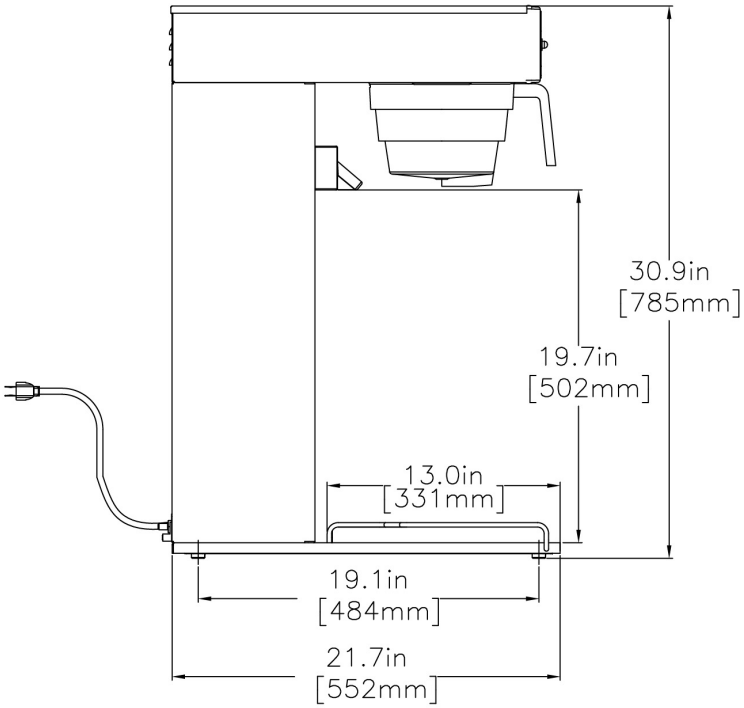

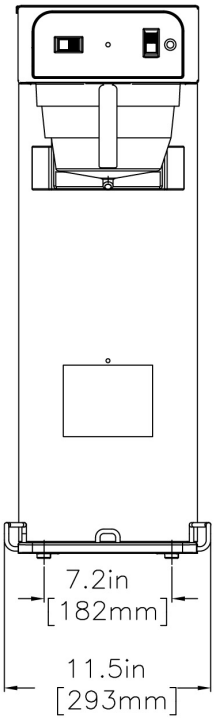

	Unit			Shipping				
	Width	**Height**	**Depth**	**Width**	**Height**	**Depth**	**Weight**	**Volume**
English	11.6 in.	31.0 in.	22.0 in.	-	-	-	37.007 lbs	7.232 ft³
Metric	29.5 cm	78.7 cm	55.9 cm	-	-	-	16.786 kgs	0.205 m³

BUNN® reserves the right to change specifications and product design without notice. Such revisions do not entitle the buyer to corresponding changes, improvements, additions or replacements for previously purchased equipment. For most current specifications and other info visit bunn.com.

Created on:
03/03/2016

Related Products & Accessories: TB3Q(36700.0059)

FUNNEL AY,SMOKE-QUICK BREW(TW

Product #: 03021.0005

FILTERS TEA/SYS2 500PK/1 50/CL

Product #: 20100.0000

POUCHPACK FUNL AY, TEA SMK S-T

Product #: 35282.0002

WATER FILTER, EQHP-TEA

Product #: 39000.0007

NO IMAGE AVAILABLE

CARTRIDGE, EQHP-TEACRTG

Product #: 39000.1007

BUNN® reserves the right to change specifications and product design without notice. Such revisions do not entitle the buyer to corresponding changes, improvements, additions or replacements for previously purchased equipment. For most current specifications and other info visit bunn.com.

Serving & Holding Options: TB3Q(36700.0059)

TD4T, SIGHT GAUGE NUDGER HDL

Product #:03250.0004

TD4T,BREW THRU LID NUDGER HDL

Product #:03250.0005

TD4T, BREW THRU LID NO DECAL NUDGER HDL

Product #:03250.0018

TD4T, W/ LIFT HANDLE

Product #:03250.0042

TD4T, W/BREW THRU LID & LIFT HANDLE

Product #:03250.0043

TDS-3, 3 GAL

Product #:33000.0000

TDS-3.5, 3.5 GAL

Product #:33000.0008

TDS-3.5, 3.5 GAL

Product #:33000.0023

TDO-4, RESERVOIR

Product #:34100.0000

TDO-5, RESERVOIR

Product #:34100.0001

TDO-4, RESERVOIR, BREW THRU

Product #:34100.0002

TDO-5, RESERVOIR, BREW THRU

Product #:34100.0003

TDO-N-3.5, RSVR

Product #:39600.0001

TDO-N-4.0, RSVR BUNN

Product #:39600.0002

NO IMAGE AVAILABLE

TDO-N-3.5, RSVR PINCH TB FCT

Product #:39600.0008

TDO-N-3.5, RSVR W/ LIFT HANDLE

Product #:39600.0031

TDO-N-3.5, RSVR W/ PINCH TUBE

Product #:39600.0047

TD3T-N, RSVR BREW THRU LID BUNN

Product #:43900.0001

TD3T-N, RSVR SOLID LID BUNN

Product #:43900.0002

BUNN® reserves the right to change specifications and product design without notice. Such revisions do not entitle the buyer to corresponding changes, improvements, additions or replacements for previously purchased equipment. For most current specifications and other info visit bunn.com.

Created on: 03/03/2016

AXIOM-DV-3 RFID (2U/1L Warmer)

19.8" x 21.4" x 8.5"
(50.3cm x 54.4cm x 21.6cm)

Servers and airpots sold separately

- Adjusts automatically to varying water pressure
- Automatic warmer shut-off when decanter is removed or freshness time has expired
- For high lime areas, BrewLOGIC® technology calculates flow rate and adjusts brew time to maintain consistent pot levels
- Ensure coffee quality with programming for brew level, cold brew lock- out and tank temperature, set easily from the front of the machine
- Coffee extraction controlled with programmable pre-infusion, pulse brew and digital temperature control
- Energy-saver mode reduces tank temperature during idle periods
- SplashGard® funnel deflects hot liquids away from the hand
- Large 200oz. (5.9L) tank provides back-to-back brewing capacity
- Dual voltage adaptable (Can operate at 120V/15 amp or 120/208-240V/20 amp)
- Tracks the age of brewed coffee
- Works with glass decanters, or thermal carafes with RFID chip
- Warmers automatically deactivate when used with thermal carafes with RFID chip
- ***Use of non-RFID accessories with RFID-enabled brewers will not result in BrewWISE benefits

Agency:

NSF UL LISTED

Specifications

Product #: 38700.0080
Water Access: Plumbed
Finish: Stainless
Funnel: Stainless Steel
Faucet: Upper
Warmers: Two Upper/ One Lower

Additional Features

RFID Technology
Smart Funnel Compatible
BrewWISE

Electrical & Capacity

Volts	Amps	Watts	Cord Attached	Plug Type	8oz cups/hr 236ml cups/hr	Input H²O Temp.	Phase	# Wires plus Ground	Hertz
120	15.0	1800	Yes	NEMA 5-15P	67	60°F (15.5°C)	1	2	60

Plumbing Requirements

PSI	kPa	Fitting Supplied	Water Flow Required (GPM)
20-90	138-621	1/4" Male Flare Fitting	-

CAD Drawings

2D	Revit	KLC
●		

BUNN® reserves the right to change specifications and product design without notice. Such revisions do not entitle the buyer to corresponding changes, improvements, additions or replacements for previously purchased equipment.
For most current specifications and other info visit bunn.com.

Created on: 03/03/2016

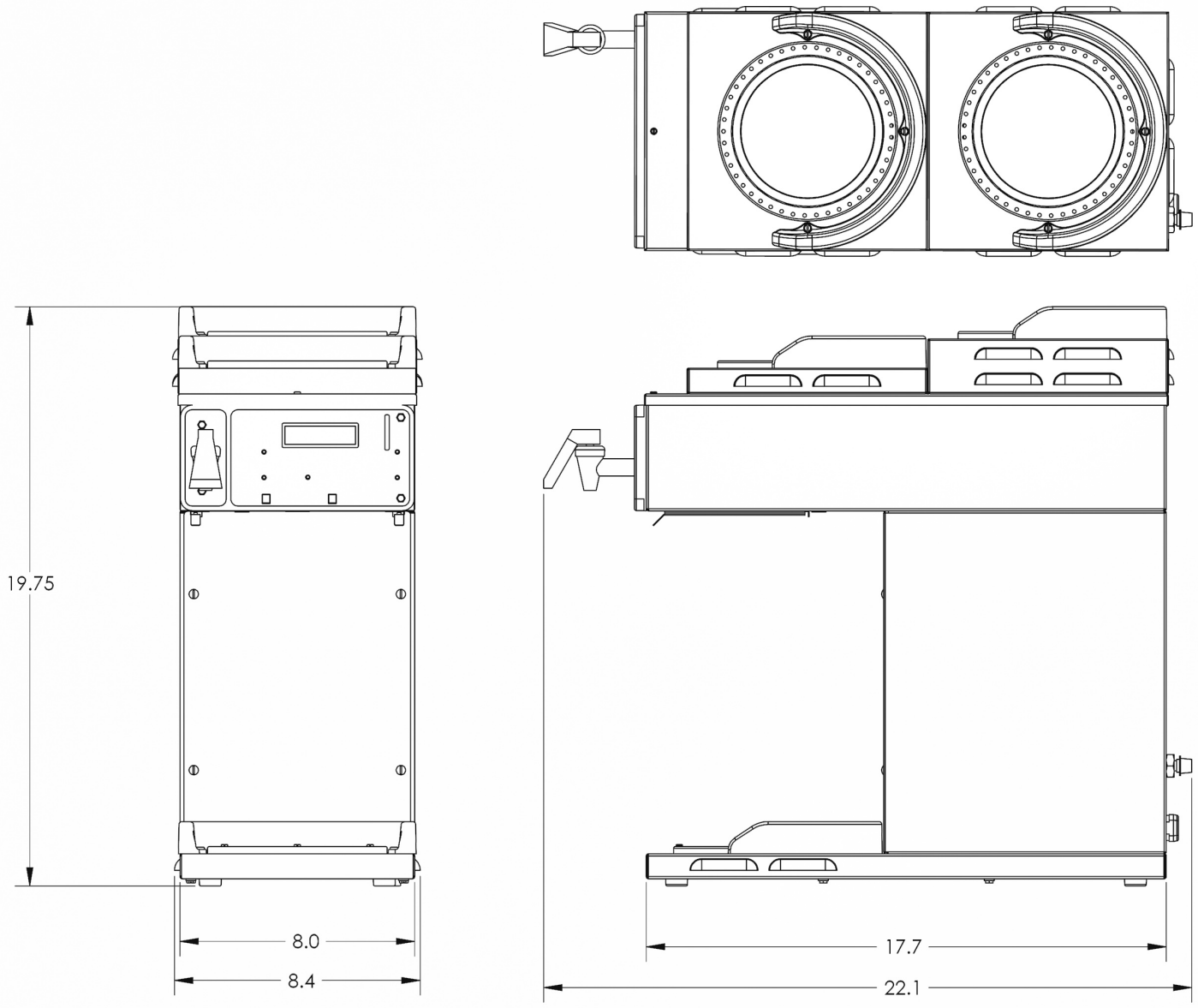

	Unit			Shipping				
	Width	**Height**	**Depth**	**Width**	**Height**	**Depth**	**Weight**	**Volume**
English	8.5 in.	19.8 in.	21.4 in.	-	-	-	35.157 lbs	6.319 ft³
Metric	21.6 cm	50.3 cm	54.4 cm	-	-	-	15.947 kgs	0.179 m³

BUNN® reserves the right to change specifications and product design without notice. Such revisions do not entitle the buyer to corresponding changes, improvements, additions or replacements for previously purchased equipment. For most current specifications and other info visit bunn.com.

Created on: 03/03/2016

Related Products & Accessories: AXIOM-DV-3 RFID (2U/1L Warmer)(38700.0080)

FILTERS,REGULAR1M 500/2 50/CL

Product #: 20115.0000

FUNNEL ASSY, SST-BLK HDL(7.12

Product #: 20216.0000

WATER FILTER, EQHP-10L

Product #: 39000.0001

WATER FILTER, EQHP-10

Product #: 39000.0004

KIT RFID ASSY, HOLDER & STRAP

Product #: 42931.1000

KIT, RFID SHIELD

Product #: 44113.1000

BUNN® reserves the right to change specifications and product design without notice. Such revisions do not entitle the buyer to corresponding changes, improvements, additions or replacements for previously purchased equipment. For most current specifications and other info visit bunn.com.

Serving & Holding Options: AXIOM-DV-3 RFID (2U/1L Warmer)(38700.0080)

EASY POUR,(BLK) 1/CS

Product #:06100.0101

EASY POUR,(BLK) 2/CS

Product #:06100.0102

EASY POUR,(BLK) 3/CS

Product #:06100.0103

EASY POUR,(BLK) 6/CS

Product #:06100.0106

EASY POUR,(BLK) 12/CS

Product #:06100.0112

EASY POUR,(BLK) 24/CS

Product #:06100.0124

EASY POUR,(BLK) 6-1/CS

Product #:06100.0156

EASY POUR,(ORN) 1/CS

Product #:06101.0101

EASY POUR,(ORN) 2/CS

Product #:06101.0102

EASY POUR,(ORN) 3/CS

Product #:06101.0103

EASY POUR,(ORN) 6/CS

Product #:06101.0106

EASY POUR,(ORN) 12/CS

Product #:06101.0112

EASY POUR,(ORN) 24/CS

Product #:06101.0124

DECANTER,GLASS-BLK 12C 24/CS

Product #:42400.0024

DECANTER,GLASS-BLK 12CUP 1PK

Product #:42400.0101

DECANTER,GLASS-BLK 12C 3/CS

Product #:42400.0103

DECANTER,GLASS-ORN 12C 24/CS

Product #:42401.0024

DECANTER, GLASS-ORN 12 CUP 1PK

Product #:42401.0101

DECANTER,GLASS-ORN 12C 3/CS

Product #:42401.0103

BUNN® reserves the right to change specifications and product design without notice. Such revisions do not entitle the buyer to corresponding changes, improvements, additions or replacements for previously purchased equipment. For most current specifications and other info visit bunn.com.

Created on: 03/03/2016

Profit from the Eagle Advantage®

Specification Sheet

Item No.: _____
Project No.: _____
S.I.S. No.: _____

Catalog Specification Sheet No. **EG10.40A**

Budget Series Worktables with Flat Top and Galvanized Base with Undershelf

Worktables with Flat Top and Galvanized Base with Adjustable Undershelf—Budget Series

Short Form Specifications

Eagle worktables, Budget series model _____. Top to be constructed of heavy gauge, type 430 stainless steel with 1½″ roll on front and rear, and sides turned down 90˚. Undershelf to be adjustable and constructed of heavy gauge galvanized. Top reinforced with welded hat channels, and sound deadened. Constructed with uni-lok® patented gusset system with the gussets recessed into the hat channels to reduce lateral movement. Legs to be 1⅝″ O.D. galvanized tubing with galvanized gussets, and 1″ hi-impact plastic bullet feet.

worktable with flat top and undershelf

Patented uni-lok® System
(Patent No. 5,165,349)

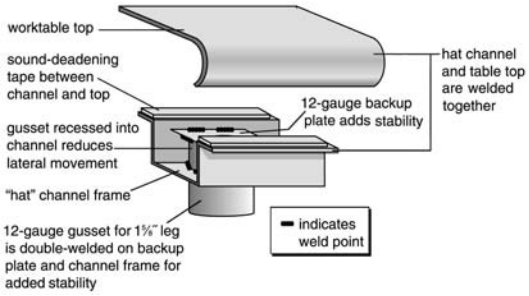

MODELS:

❑ *T2424B*	❑ *T24108B*	❑ *T3072B*	❑ *T3660B*
❑ *T2430B*	❑ *T24120B*	❑ *T3084B*	❑ *T3672B*
❑ *T2436B*	❑ *T24132B*	❑ *T3096B*	❑ *T3684B*
❑ *T2448B*	❑ *T24144B*	❑ *T30108B*	❑ *T3696B*
❑ *T2460B*	❑ *T3030B*	❑ *T30120B*	❑ *T36108B*
❑ *T2472B*	❑ *T3036B*	❑ *T30132B*	❑ *T36120B*
❑ *T2484B*	❑ *T3048B*	❑ *T30144B*	❑ *T36132B*
❑ *T2496B*	❑ *T3060B*	❑ *T3648B*	❑ *T36144B*

Tabletop

- Patented uni-lok® gusset system (patent #5,165,349): gussets are recessed into hat channel, reducing lateral movement.
- Top reinforced with welded-on hat channel.
- Sound-deadened between top and channels.
- 1½″ (38mm)-diameter 180˚ rolled edges on front and rear. Ends are turned down 90˚ providing for flush installations when required.
- Heavy gauge type 430 polished stainless steel.

Adjustable Undershelf

- Heavy gauge, galvanized.
- Gusset welded to each corner.

Legs—1⅝″ (41mm)-diameter

- Tables 96″ (2438mm) and longer come with six legs or more.
- Heavy gauge galvanized steel.
- 1″ (25mm) adjustable hi-impact plastic feet.

Options / Accessories

- ❑ Drawer
- ❑ Lock
- ❑ Casters
- ❑ Stainless steel bullet feet
- ❑ Overshelves
- ❑ Duplex receptacles
- ❑ Pot rack
- ❑ Sink
- ❑ Additional undershelf
- ❑ Stabilizer Bar (for 30″- and 36″-wide tables)

EAGLE GROUP
100 Industrial Boulevard, Clayton, DE 19938-8903 USA
Phone: 302-653-3000 • Fax: 302-653-2065
www.eaglegrp.com

Foodservice Division: Phone 800-441-8440
MHC/Retail Display Divisions: Phone 800-637-5100

AutoQuotes

KCL

Certifications / Approvals

NSF

For custom configuration or fabrication needs, contact our **SpecFAB® Division.**
Phone: 302-653-3000 • Fax: 302-653-3091 • e-mail: specfab@eaglegrp.com

EG10.40A Rev. 07/08

Spec sheets available for viewing, printing or downloading from our online literature library at *www.eaglegrp.com*

Eagle Foodservice Equipment, Eagle MHC, SpecFAB®, and Retail Display are divisions of Eagle Group. ©2008 by the Eagle Group

EAGLE GROUP®
Profit from the Eagle Advantage®

Item No.: _____
Project No.: _____
S.I.S. No.: _____

Worktables with Flat Top and Galvanized Base with Adjustable Undershelf—Budget Series

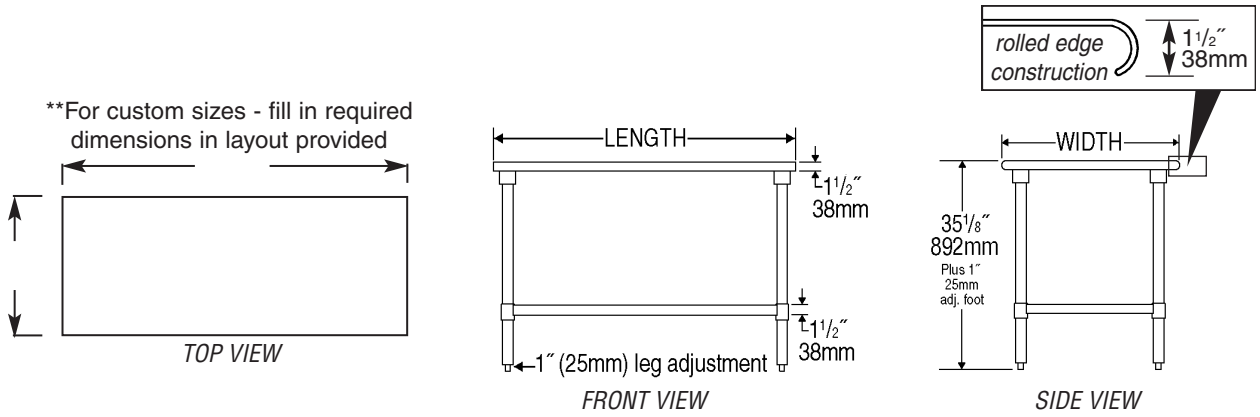

model #	# of legs	width in.	width mm	length in.	length mm	weight lbs.	weight kg
T2424B	4	24″	610	24″	610	40	18.1
T2430B	4	24″	610	30″	762	45	20.4
T2436B	4	24″	610	36″	914	50	22.7
T2448B	4	24″	610	48″	1219	60	27.2
T2460B	4	24″	610	60″	1524	70	31.8
T2472B	4	24″	610	72″	1829	80	36.3
T2484B	4	24″	610	84″	2134	90	40.8
T2496B	6	24″	610	96″	2438	100	45.4
T24108B	6	24″	610	108″	2743	110	49.9
T24120B	6	24″	610	120″	3048	120	54.4
T24132B	8	24″	610	132″	3353	130	59.0
T24144B	8	24″	610	144″	3658	140	63.5
T3030B	4	30″	762	30″	762	46	20.9
T3036B	4	30″	762	36″	914	52	23.6
T3048B	4	30″	762	48″	1219	64	29.0
T3060B	4	30″	762	60″	1524	76	34.5
T3072B	4	30″	762	72″	1829	84	38.1
T3084B	4	30″	762	84″	2134	96	43.6
T3096B	6	30″	762	96″	2438	108	49.0
T30108B	6	30″	762	108″	2743	120	54.4
T30120B	6	30″	762	120″	3048	132	59.9
T30132B	8	30″	762	132″	3353	144	65.3
T30144B	8	30″	762	144″	3658	156	70.8
T3648B	4	36″	914	48″	1219	70	31.8
T3660B	4	36″	914	60″	1524	82	37.2
T3672B	4	36″	914	72″	1829	96	43.6
T3684B	4	36″	914	84″	2134	108	49.0
T3696B	6	36″	914	96″	2438	120	54.4
T36108B	6	36″	914	108″	2743	132	59.9
T36120B	6	36″	914	120″	3048	144	65.3
T36132B	8	36″	914	132″	3353	156	70.8
T36144B	8	36″	914	144″	3658	168	76.2

EAGLE GROUP
100 Industrial Boulevard, Clayton, DE 19938-8903 USA
Phone: 302-653-3000 • Fax: 302-653-2065
www.eaglegrp.com
Foodservice Division: Phone 800-441-8440
MHC/Retail Display Divisions: Phone 800-637-5100

Printed in U.S.A.
©2008 by Eagle Group
Rev. 07/08

Spec sheets available for viewing, printing or downloading from our online literature library at *www.eaglegrp.com*

Although every attempt has been made to ensure the accuracy of the information provided, we cannot be held responsible for typographical or printing errors. Information and specifications are subject to change without notice. Please confirm at time of order.

Profit from the Eagle Advantage®

Specification Sheet

Item No.: _____
Project No.: _____
S.I.S. No.: _____

AdjusTable® Work Surface Systems

MODELS:

❑ *T2436**	❑ *T2436*-1*	❑ *T2436*-2*
❑ *T2448**	❑ *T2448*-1*	❑ *T2448*-2*
❑ *T2460**	❑ *T2460*-1*	❑ *T2460*-2*
❑ *T3036**	❑ *T3036*-1*	❑ *T3036*-2*
❑ *T3048**	❑ *T3048*-1*	❑ *T3048*-2*
❑ *T3060**	❑ *T3060*-1*	❑ *T3060*-2*

Short Form Specifications

Eagle AdjusTable® Work Surface System, Basic Unit, model _____. Heavy gauge (16/304, 14/304) stainless steel top with two chrome wire undershelves with patented QuadTruss® design, and chrome posts.

Eagle AdjusTable® Work Surface System, One-Tier Unit, model _____. Heavy gauge (16/304, 14/304) stainless steel top with two chrome wire undershelves with patented QuadTruss® design, one 14″ wide chrome wire overshelf with patented QuadTruss® design and chrome posts.

Eagle AdjusTable® Work Surface System, Two-Tier Unit, model _____. Heavy gauge (16/304, 14/304) stainless steel top with two chrome wire undershelves with patented QuadTruss® design, two 14″ wide chrome wire overshelves with patented QuadTruss® design and chrome posts.

basic unit

1-tier unit

2-tier unit

Options / Accessories

- ❑ Drawer
- ❑ Lock
- ❑ Casters
- ❑ Additional overshelves
- ❑ Duplex receptacle
- ❑ Additional undershelves
- ❑ Dividers
- ❑ Ledges
- ❑ Grid panel

Design and Constuction Features

- Stainless steel tabletop/work surface, unsurpassed in the industry for quality.
- Two chrome wire undershelves with patented Quad-Truss® design (patent #5,390,803), which makes shelves up to 25% stronger.
- Four chrome posts, numbered in 1″ (25mm) increments for flexible and level positioning of the two chrome wire undershelves.
- An almost unlimited number of custom configurations can be created by adding undershelves or overshelves.

Basic Units

- Stainless steel tabletop/work surface
- Four 33″ (838mm) chrome posts
- Two chrome wire undershelves*

One-Tier Units

- Stainless steel tabletop/work surface
- Two 54″ (1372mm) rear chrome posts
- Two 33″ (838mm) front chrome posts
- Two 21″ (533mm) front chrome posts for overshelf
- One 14″ (356mm)-wide chrome wire overshelf
- Two chrome wire undershelves*

Two-Tier Units

- Stainless steel tabletop/work surface
- Two 63″ (1600mm) rear chrome posts
- Two 33″ (838mm) front chrome posts
- Two 29″ (737mm) front chrome posts for overshelf
- Two 14″ (356mm)-wide chrome wire overshelves
- Two chrome wire undershelves*

* 18″ (457mm) wide undershelf for 24″ (610mm) wide table; 24″ (610mm) wide undershelf for 30″ (762mm) wide table

Certifications / Approvals

NSF

AutoQuotes

KCL

EAGLE GROUP
100 Industrial Boulevard, Clayton, DE 19938-8903 USA
Phone: 302-653-3000 • Fax: 302-653-2065
www.eaglegrp.com

Foodservice Division: Phone 800-441-8440
MHC/Retail Display Divisions: Phone 800-637-5100

For custom configuration or fabrication needs, contact our **SpecFAB® Division.**
Phone: 302-653-3000 • Fax: 302-653-3091 • e-mail: specfab@eaglegrp.com

Spec sheets available for viewing, printing or downloading from our online literature library at *www.eaglegrp.com*

Eagle Foodservice Equipment, Eagle MHC, SpecFAB®, and Retail Display are divisions of Eagle Group. ©2008 by the Eagle Group

EAGLE GROUP®
Profit from the Eagle Advantage®

Item No.: _____
Project No.: _____
S.I.S. No.: _____

AdjusTable® Work Surface Systems

Basic Units

basic unit

16 gauge type 304 model #	14 gauge type 304 model #	width in.	width mm	length in.	length mm	weight lbs.	weight kg
T2436EBW	*T2436EW*	24″	610	36″	914	65	29.5
T2448EBW	*T2448EW*	24″	610	48″	1219	81	36.7
T2460EBW	*T2460EW*	24″	610	60″	1524	99	44.9
T3036EBW	*T3036EW*	30″	762	36″	914	75	34.0
T3048EBW	*T3048EW*	30″	762	48″	1219	94	42.6
T3060EBW	*T3060EW*	30″	762	60″	1524	115	52.2

One-Tier Units

1-tier unit

16 gauge type 304 model #	14 gauge type 304 model #	width in.	width mm	length in.	length mm	weight lbs.	weight kg
T2436EBW-1	*T2436EW-1*	24″	610	36″	914	73	33.1
T2448EBW-1	*T2448EW-1*	24″	610	48″	1219	91	41.3
T2460EBW-1	*T2460EW-1*	24″	610	60″	1524	113	51.3
T3036EBW-1	*T3036EW-1*	30″	762	36″	914	83	37.6
T3048EBW-1	*T3048EW-1*	30″	762	48″	1219	104	47.2
T3060EBW-1	*T3060EW-1*	30″	762	60″	1524	129	58.5

Two-Tier Units

2-tier unit

16 gauge type 304 model #	14 gauge type 304 model #	width in.	width mm	length in.	length mm	weight lbs.	weight kg
T2436EBW-2	*T2436EW-2*	24″	610	36″	914	81	36.7
T2448EBW-2	*T2448EW-2*	24″	610	48″	1219	101	45.8
T2460EBW-2	*T2460EW-2*	24″	610	60″	1524	127	57.6
T3036EBW-2	*T3036EW-2*	30″	762	36″	914	91	41.3
T3048EBW-2	*T3048EW-2*	30″	762	48″	1219	114	51.7
T3060EBW-2	*T3060EW-2*	30″	762	60″	1524	143	64.9

EAGLE GROUP
100 Industrial Boulevard, Clayton, DE 19938-8903 USA
Phone: 302-653-3000 • Fax: 302-653-2065
www.eaglegrp.com

Foodservice Division: Phone 800-441-8440
MHC/Retail Display Divisions: Phone 800-637-5100

Printed in U.S.A.
©2008 by Eagle Group
Rev. 11/08

Spec sheets available for viewing, printing or downloading from our online literature library at *www.eaglegrp.com*

Although every attempt has been made to ensure the accuracy of the information provided, we cannot be held responsible for typographical or printing errors. Information and specifications are subject to change without notice. Please confirm at time of order.

Profit from the Eagle Advantage®

Specification Sheet

Item No.: _____
Project No.: _____
S.I.S. No.: _____

Wall Shelves

Short Form Specifications

Eagle Wall Shelf, model _____. Constructed of 16 gauge type 430, 16 gauge type 304, or 14 gauge type 304 stainless steel. 1½″ roll on front, with 1½″ upturn on rear and ends. Stainless steel mounting brackets are stud welded to shelf.

MODELS:

- ❑ ***WS1024-****
- ❑ ***WS1036-****
- ❑ ***WS1048-****
- ❑ ***WS1060-****
- ❑ ***WS1072-****
- ❑ ***WS1084-****
- ❑ ***WS1096-****
- ❑ ***WS10108-****
- ❑ ***WS10120-****
- ❑ ***WS1224-****
- ❑ ***WS1236-****
- ❑ ***WS1248-****
- ❑ ***WS1260-****
- ❑ ***WS1272-****
- ❑ ***WS1284-****
- ❑ ***WS1296-****
- ❑ ***WS12108-****
- ❑ ***WS12120-****

** See chart on back page for complete model numbers.*

#WS1236-16/3 wall shelf

Wall Mounted Shelves

- 1½″ (38mm) roll on front.
- 1½″ (38mm) upturn on rear and ends.
- Die-formed stainless steel mounting brackets are stud-welded to shelf.
- All stainless steel polished to #4 finish.
- Available in 16 gauge type 430, 16 gauge type 304, and 14 gauge type 304 stainless steel.
- Wide selection of sizes.

EAGLE GROUP
100 Industrial Boulevard, Clayton, DE 19938-8903 USA
Phone: 302-653-3000 • Fax: 302-653-2065
www.eaglegrp.com

Foodservice Division: Phone 800-441-8440
MHC/Retail Display Divisions: Phone 800-637-5100

Certifications / Approvals

NSF

AUTOQUOTES

KCL

For custom configuration or fabrication needs, contact our **SpecFAB® Division.**
Phone: 302-653-3000 • Fax: 302-653-2065 • e-mail: quotes@eaglegrp.com

Spec sheets available for viewing, printing or downloading from our online literature library at *www.eaglegrp.com*

Eagle Foodservice Equipment, Eagle MHC, SpecFAB®, and Retail Display are divisions of Eagle Group. ©2013 by the Eagle Group

EAGLE GROUP®
Profit from the Eagle Advantage®

Item No.: _____
Project No.: _____
S.I.S. No.: _____

Wall Mounted Shelves

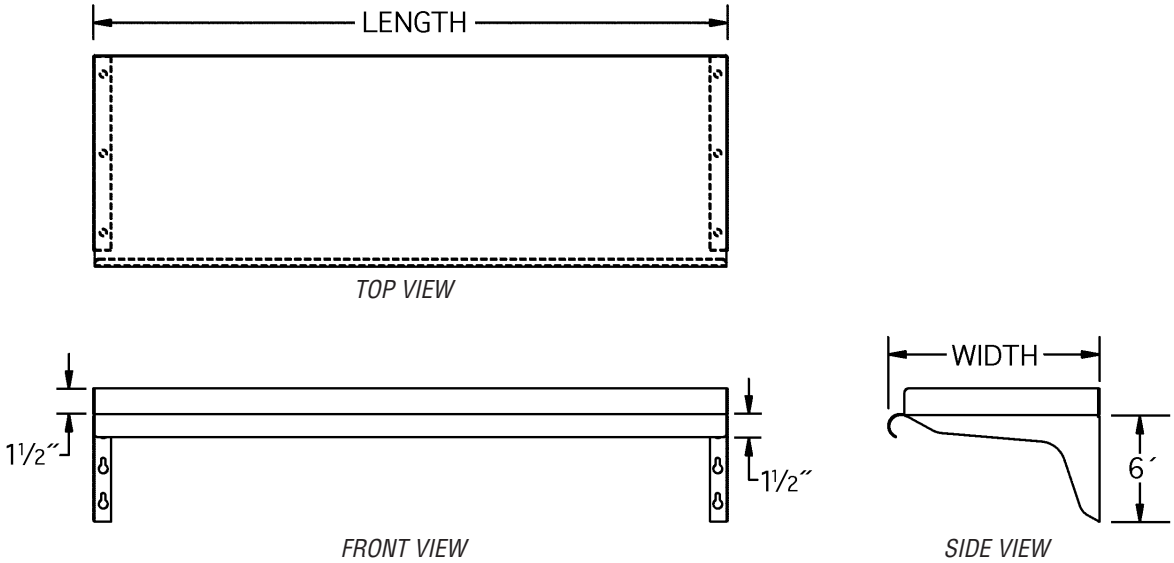

16 gauge type 430 model #	16 gauge type 304 model #	14 gauge type 304 model #	width* in.	width* mm	length in.	length mm	weight lbs.	weight kg
WS1024-16/4	***WS1024-16/3***	***WS1024-14/3***	10″	254	24″	610	10	4.5
WS1036-16/4	***WS1036-16/3***	***WS1036-14/3***	10″	254	36″	914	12	5.4
WS1048-16/4	***WS1048-16/3***	***WS1048-14/3***	10″	254	48″	1219	15	6.8
WS1060-16/4	***WS1060-16/3***	***WS1060-14/3***	10″	254	60″	1524	20	9.0
WS1072-16/4	***WS1072-16/3***	***WS1072-14/3***	10″	254	72″	1829	22	10.0
WS1084-16/4	***WS1084-16/3***	***WS1084-14/3***	10″	254	84″	2134	24	10.9
WS1096-16/4	***WS1096-16/3***	***WS1096-14/3***	10″	254	96″	2438	29	13.2
WS10108-16/4	***WS10108-16/3***	***WS10108-14/3***	10″	254	108″	2743	32	14.5
WS10120-16/4	***WS10120-16/3***	***WS10120-14/3***	10″	254	120″	3048	34	15.4
WS1224-16/4	***WS1224-16/3***	***WS1224-14/3***	12″	305	24″	610	12	5.4
WS1236-16/4	***WS1236-16/3***	***WS1236-14/3***	12″	305	36″	914	14	6.4
WS1248-16/4	***WS1248-16/3***	***WS1248-14/3***	12″	305	48″	1219	17	7.7
WS1260-16/4	***WS1260-16/3***	***WS1260-14/3***	12″	305	60″	1524	23	10.4
WS1272-16/4	***WS1272-16/3***	***WS1272-14/3***	12″	305	72″	1829	25	11.3
WS1284-16/4	***WS1284-16/3***	***WS1284-14/3***	12″	305	84″	2134	28	12.7
WS1296-16/4	***WS1296-16/3***	***WS1296-14/3***	12″	305	96″	2438	31	14.1
WS12108-16/4	***WS12108-16/3***	***WS12108-14/3***	12″	305	108″	2743	36	16.3
WS12120-16/4	***WS12120-16/3***	***WS12120-14/3***	12″	305	120″	3048	39	17.6

* 15″ and 18″ (381 and 457mm)-wide shelves available. To order, replace "12" in model number with a "**15**" or "**18**" indicating shelf width. Example: WS**15**36-16/3

EAGLE GROUP
100 Industrial Boulevard, Clayton, DE 19938-8903 USA
Phone: 302-653-3000 • Fax: 302-653-2065
www.eaglegrp.com

Foodservice Division: Phone 800-441-8440
MHC/Retail Display Divisions: Phone 800-637-5100

Printed in U.S.A.
©2013 by Eagle Group
Rev. 09/13

Spec sheets available for viewing, printing or downloading from our online literature library at *www.eaglegrp.com*

Although every attempt has been made to ensure the accuracy of the information provided, we cannot be held responsible for typographical or printing errors. Information and specifications are subject to change without notice. Please confirm at time of order.

SECTION 16000 - ARCHITECTURAL CRITERIA FOR DIVISION 16 SYSTEMS

PART 1 - GENERAL

1.1 RELATED DOCUMENTS

A. Drawings and general provisions of the Contract, including General and Supplementary Conditions, and Division 01 Specification Sections, apply to this Section.

1.2 SUMMARY

A. This Section outlines architectural and aesthetic parameters as related to all mechanical-type work primarily outlined in Division 16.

B. Related Sections: The following sections contain requirements that relate to this Section:

1. Division 01 Section “Closeout Procedures” for submitting operation and maintenance manuals.
2. Division 01 Section “Operation and Maintenance Data” for operation and maintenance manual requirements.
3. Division 01 Section “Project Record Documents” for submitting Record Drawings, Record Specifications, and Record Product Data.
4. Division 01 Section “Demonstration and Training” for requirements for instructing Owner’s personnel.

1.3 PRECEDENCE

A. In the event of a conflict, the criteria herein shall take precedence over that outlined elsewhere in Division 16 and/or shown on the Drawings only to the extent not to jeopardize the performance and/or function of the respective electrical items.

1.4 SPECIFICATIONS AND DRAWINGS

A. The drawings show the general run of conduits, raceways, busways, etc., and the approximate location of apparatus. Do not scale the drawings to determine exact positions and clearances. Obtain from the Architect any necessary dimensions not shown. Notify the Architect immediately of any changes in the size or location of the material or equipment, which may be necessary in order to meet field conditions, or in order to avoid conflict with the equipment of other Sections. Obtain the Architect’s approval before such deviations are made.

PART 2 - PRODUCTS, FINISHES AND EXECUTION

2.1 The “WHITE” color commonly used as factory finish on painted items shall in exposed-to-view conditions:

A. Incorporate the number of coats necessary to provide total painted items shall in exposed-to-view conditions:

B. All other electrical items (e.g. lay-in lights; incandescent light trim, exit lights etc.), and other metallic components (e.g. grid members, edge mould, etc.) for wall, ceiling, and soffit assemblies to be similar to common "WHITE".

2.2 Unless specifically dimensionally noted on the drawings, all recessed lights shall be centered in lay-in ceiling tiles.

2.3 All exterior equipment, piping, and related supports, (e.g. meters, generators, transformers, etc.) unless they are factory finished, shall be painted in a color selected by the Architect. Exercise care not to paint over the manufacturer’s labels, instructions, and other printed data on the equipment. The purpose herein is to maintain the Architect’s color scheme throughout the project. Contractor shall be responsible for assuring paint compatibilities, preparation of items to be painted, number of coats for cover and uniformity, and ultimate paint adhesion to surfaces.

2.4 All concrete exterior equipment pads shall:

A. Be set level with top elevation not less than four inches above finish grade level.

B. Have one inch chamfered edges.

C. Be dressed smooth on all exposed faces/edges to present a uniform appearance.

2.5 Contractor shall submit full-scale details for proposed mounting of all switch and dimmer gangs having more than four units and/or over twenty square inches in exposed-to-view size area to the Architect for review and approval action.

2.6 Use “JUMBO” size plates at all conditions. Paint to make wall if cover plate falls on accent painted wall.

2.7 All panelboard designation labels shall be black Bakelite with integral white etched-in caricatures (18 point size minimum). All panelboard directories shall be neatly typed and orderly with respect to the circuit breaker layout on the panelboard. All circuit breakers shall be identified with manufacturer’s standard printed self-stick tab markers.

END OF SECTION 16000

SECTION 16010 - ELECTRICAL GENERAL PROVISIONS

PART 1 - GENERAL

1.1 RELATED DOCUMENTS

A. Drawings and general provisions of the Contract, including General and Supplementary Conditions, and Division 01 Specification Sections, apply to this Section.

1.2 SUMMARY

A. Provide a complete electrical installation consisting of electrical service, distribution, lighting system, life safety system, and partial telephone, data, and video system as shown on the drawings or specified herein.

B. Related Sections: The following sections contain requirements that relate to this Section:

1. Division 01 Section “Closeout Procedures” for submitting operation and maintenance manuals.
2. Division 01 Section “Operation and Maintenance Data” for operation and maintenance manual requirements.
3. Division 01 Section “Project Record Documents” for submitting Record Drawings, Record Specifications, and Record Product Data.
4. Division 01 Section “Demonstration and Training” for requirements for instructing Owner’s personnel.

1.3 CODES

A. All electrical work under the requirements of these specifications shall be in conformance with the requirements of the current editions of the National Electrical Code, and the Occupational Safety and Health Act, and shall also be in compliance with all applicable State and/or local laws and ordinances.

1.4 DRAWINGS

A. The locations shown on the drawings are, unless dimensioned, only approximate and the Contractor shall select the actual locations for installation with due consideration for the features of the construction and the work of other trades.

B. The drawings and specifications shall both be considered as part of the Contract. Any work or material shown in one and omitted in the other, or which may fairly be implied by both or either, shall be provided in order to give a complete job.

C. Refer to the Architectural, Structural and Mechanical plans and details for dimensions, and fit the work to conform to the details of building construction.

The right is reserved to shift any switch, receptacle, ceiling outlet or any special outlet a maximum of 10'-0" from its location as shown before it is permanently installed, without incurring additions to the Contract.

D. All conduit and wiring shown on the electrical drawings shall be provided under this Division regardless of its function.

E. No deviations from the drawings and specifications shall be made. If it is found that existing conditions make desirable a modification in requirements covering any particular item, report such item to the Architect for his decision and instructions.

F. All manufacturers listed on drawings and in specifications are for design purposes only and shall not be used for sole specification.

1.5 COORDINATING WITH OTHER DIVISIONS

A. Motors will, unless noted otherwise, be furnished with the equipment they drive.

B. Power wiring and connections for all heating, ventilating and air conditioning equipment shall be furnished under this division.

C. Controllers and interlock wiring, including conduit, wire and connections for all heating, ventilating and air conditioning equipment shall be furnished under other divisions of the specifications.

D. Disconnect switches, where not furnished with equipment, will be furnished and mounted under this division of the specifications.

E. Control connections for 120 volt exhaust fans will be furnished under this division.

F. Before any piping, conduit, outlets, equipment or lighting fixtures are located in any area, coordinate the space requirements of all trades. Such shall be arranged so that space conditions will allow all trades to install their work, and will also permit access for future maintenance and repair.

G. Piping, ductwork, conduit and equipment installed at variance with the above requirements shall be relocated and/or revised to conform at the expense of the Contractor and without incurring additions to the Contract.

H. Coordination of space requirements with all trades shall be performed so that:

1. No piping or ductwork other than electrical, shall be run within 42" of panelboards, switchboards or transformers.
2. No pipes or ducts that operate at a temperature in excess of 120 degree F. shall be installed nearer than 3" to any electrical conductor.

I. Location of Existing Utilities: See Supplementary General Conditions, Article 1.7

and 1.11, for Contractor's responsibilities to arrange for and pay for a utility locator prior to construction activities of this Division.

J. Detectable Warning Tape: See Section 312000 – Earth Moving, Article 3.12 H. for Contractor's responsibility to furnish and install Detectable Warning Tape at all utilities.

1.6 ADJUSTING AND TESTING

A. All electrical equipment furnished under this contract including the electrical equipment furnished under other sections shall be tested for proper operation by the Contractor under this section. Protective devices shall be examined for proper rating and application and adjusted as necessary. Completed wiring systems shall be free of short circuits.

1.7 CERTIFICATES OF APPROVAL

A. All necessary permits, inspection fees and licenses shall be obtained and paid for by the Contractor.

B. At the completion of the building, the Contractor shall furnish and deliver to the Owner, Certificates of Approval from the State Fire Marshal.

1.8 SHOP DRAWINGS

A. Shop drawings and/or catalog data on all items of equipment and materials shall be submitted in conformity with requirements of the General and Supplementary Conditions. The responsibility of complying with the Contract Documents shall not be relieved by the review of shop drawings.

B. The submittal shall include a list of the manufacturers of the principal items of material: wire, conduit, connectors, devices, boxes, lighting fixtures, special systems, panelboards, switchboards, etc.

C. Specified catalog numbers and trade names are intended to describe the material, devices, or apparatus desired. Similar materials of other manufacturers, if of equal or equivalent quality, capacity and character may be substituted in conformity with provisions of the General and Supplementary Conditions.

D. Samples of all materials proposed for use shall be presented to the Architect for his approval when requested.

1.9 MATERIAL, WORKMANSHIP, AND PROTECTION

A. Material and apparatus of the latest and best design and manufacture shall be installed to provide complete electrical systems. Experienced mechanics of proper trades shall perform work and work harmoniously with all other trades. All work, material, fixtures, apparatus, etc., shall be protected from injury or damage

and delivered clean. All cutting and channeling shall be accomplished in a neat and workmanlike manner without removal of excess materials. Patch and replace all cut and channeled areas with material similar to adjacent construction.

B. Unless noted otherwise, all material shall be new and shall bear the inspection label of Underwriters' Laboratories, Inc. (UL).

C. The published standards and requirements of the National Electrical Manufacturers Association, the American National Standards Institute, the Institute of Electrical and Electronic Engineers and the American Society of Testing Materials shall apply where applicable.

1.10 QUALITY ASSURANCE

A. The Contractor expressly warrants that the company performing the installation of electrical systems has demonstrated proficiency in the installation and adjustment of such systems by the successful performance of work of the nature specified herein on an at least three commercial or institutional buildings, each having a minimum 800 ampere service at 277/480 V, 3 Phase, 4 Wire.

B. The Contractor further warrants that the aforesaid subcontractor, if any has necessary personnel, instruments, tools, and equipment to perform the installation, start-up, instruction and maintenance service specified.

C. The Contractor also warrants that the aforesaid installer and all subcontractors used in this division, if any, has been in business performing services of the nature specified herein for at least five (5) years.

1.11 GUARANTEE

A. Defects due to faulty material, workmanship or design which develop within one year from date of Material Completion are to be properly remedied, replaced and made good without cost to the Owner.

1.12 INTERRUPTIONS OF POWER AND CONNECTIONS TO EXISTING BUSSES

A. The work is to be carried out without unnecessary interference with the Owner's existing facilities and operations. Power interruptions shall be scheduled with the owner and shall be taken only during those periods which he has approved in writing.

1.13 DEMOLITION

A. Divert, extend, re - route, replace, reconnect or otherwise make good and leave in safe working order all portions of the existing electrical installation required to remain in use during and/or after the completion of the contract.

END OF SECTION 16010

SECTION 16100 - BASIC MATERIALS AND METHODS

PART 1 - GENERAL

1.1 RELATED DOCUMENTS

A. Drawings and general provisions of the Contract, including General and Supplementary Conditions, and Division 01 Specification Sections, apply to this Section.

1.2 SUMMARY

A. Summary

1. All work specified in this Section shall comply with the provisions of Section 16010.
2. This Section covers the basic electrical materials and methods that are applicable to all sections of Division 16.
3. Material furnished for inclusion in the work shall have been designed, built and tested in accordance with applicable NEMA and IEEE standards, shall be approved and labeled by the Underwriters' Laboratories, Inc. and shall be new, unless otherwise noted.
4. All material and equipment shall be installed in accordance with manufacturer's recommendations.

B. Related Sections: The following sections contain requirements that relate to this Section:

1. Division 01 Section “Closeout Procedures” for submitting operation and maintenance manuals.
2. Division 01 Section “Operation and Maintenance Data” for operation and maintenance manual requirements.
3. Division 01 Section “Project Record Documents” for submitting Record Drawings, Record Specifications, and Record Product Data.
4. Division 01 Section “Demonstration and Training” for requirements for instructing Owner’s personnel.
5. Section 16010 Electrical General Provisions
6. Section 16500 Lighting
7. Section 16720 Fire Alarm System

PART 2 - PRODUCTS

2.1 CONDUIT AND RACEWAYS

A. Rigid steel conduit shall be low carbon, hot-dipped galvanized both inside and out with threaded joints.

B. Intermediate metal conduit (IMC) shall be steel, galvanized both inside and out with threaded joints.

C. Electrical metallic tubing (EMT) shall be steel, galvanized both inside and out.

D. Flexible conduit shall be flexible steel conduit tubing and shall meet Underwriters' Laboratories Standard for Flexible Steel Conduit.

E. Steel conduit approved manufacturers are Allied, Southwire, Triangle, Republic, Wheatland and Pittsburgh.

F. PVC conduit shall be Schedule 40 polyvinyl chloride, conforming to UL65.

2.2 CONDUIT FITTINGS

A. Rigid steel and IMC conduit fittings shall be zinc-coated, ferrous metal and threaded type.

B. EMT fittings shall be zinc-coated set-screw type. EMT connectors shall have insulated throats. Die-cast fittings will not be allowed.

C. Conduit connections to panel cabinets and pull boxes shall have grounding wedge lugs between the busing and the box or locknuts designed to bite into the metal.

D. Each end of each conduit shall be provided with either an insulated throat connector or separate locknut and insulated bushing. Bushing shall be installed before any wire is pulled.

E. Where hubs or water-tight threaded connections are not provided as a part of the enclosure and are required, water-tight hubs similar and equal to Myers "Scru-Tite" hubs shall be installed. Approved manufacturers are RACO, Steel City and Appleton.

F. Junction boxes shall be of code gauge metal with continuously welded joints or of cast metal as called for on the drawings. All junction boxes shall be gasketed screw cover boxes.

G. Pull fittings shall be type "LB", "C", and "TB" condulet fittings on individual conduits where conductor size does not exceed #2 AWG for 600 volt insulation. O.Z. Mfg. Co. type "PBW", Appleton Electric Co. type "PTC", or approved equal, pull box fittings of the proper length for the size conduit involved and the size and type of conductors contained, shall be used in all other cases unless otherwise noted on the drawings.

H. Conduit fittings approved manufacturers are Raco, Steel City, O.Z., Thomas & Betts, Efcor and Appleton.

I. Expansion fittings shall be provided in all conduit which crosses an expansion joint.

2.3 CONDUCTORS

A. Copper Conductors

1. Conductors shall be copper of 98% conductivity, 600 volt, "THHN", "THHW" or "XHHW" insulation. Sizes specified are AWG gauge for No. 4/0 and smaller and circular mils (MCM) for all sizes larger than No. 4/0. Conductors No. 10 and smaller shall be solid; No. 8 and larger shall be stranded. SIM pull by Southwire or approved equal.
2. Copper conductor approved manufacturers are Anaconda, General Cable, General Electric, Hatfield, Paranite, Phelps-Dodge, Reynolds, Simplex, Diamond, Rome and Southwire.

2.4 OUTLETS

A. Outlet boxes and covers shall be of such form and dimensions as to be adapted to their specific usage, location, size and quantity of conduit, and size and quantity of conductors entering the boxes. In special "Fire Rated" partitions, outlets shall comply with ASTM No. E119.

B. Flush ceiling outlets for surface or pendant mounted lighting fixtures shall be 4" square or octagonal pressed steel boxes. Boxes for devices in unfinished masonry walls or stud walls shall be pressed steel square corner, sectional switch boxes, or shall be 4" square box with a square cornered tile wall cover, set flush with masonry construction. Boxes in concrete ceiling slabs shall be octagonal, shallow pressed steel concrete boxes. Boxes exposed shall be cast type.

C. All outlet boxes in plaster walls or ceilings shall be provided with plaster rings.

D. Junction boxes and all outlets not indicated as containing wiring devices or lighting fixtures shall have covers. Covers for outlets in walls shall be as specified for wall switches and receptacles.

E. Outlet box approved manufacturers are Appleton, Raco, Steel City and Crouse-Hinds.

2.5 DISCONNECT SWITCHES

A. Disconnect switches shall be "heavy-duty" type enclosed switches of quick-make, quick-break construction. Switches shall be horsepower rated for 600 volts AC as required. Lugs shall be UL listed for copper and aluminum cable.

B. Padlocking provisions shall be provided for padlocking in the "off" position.

C. Switches shall be furnished in NEMA 1 general purpose enclosure unless noted otherwise. Switches located on the exterior of the building or in "wet" locations shall have NEMA 3R enclosures.

D. Fused disconnect switches shall have rejection type fuse clips with dual element, current limiting fuses of rating shown.

E. Manual motor controllers for single phase, fractional horsepower motors shall be single or two pole as required, and for the proper voltage. Each shall have one thermal overload device and shall be General Electric RR101Y or CR101H, or approved equal by Square D and Siemens.

2.6 WIRING DEVICES

A. Toggle switches shall be specification grade rated 20 ampere at 120-277 volts A.C. Switches shall be Harvey-Hubbell, Inc. catalog No. 1221-GRY, 1222-GRY, 1223-GRY, or 1224-GRY, depending on the type switch required for the application involved, or an approved equal. Refer to drawings for motion sensor controls. Coordinate final color of all wiring devices with Architect.

B. Convenience outlets shall be 3 wire grounding type rated 15 amperes at 125 volts A.C. or D.C. Duplex receptacles shall be Harvey-Hubbell, Inc. No. 5252-GRY, or approved equal. Coordinate final finish with Architect.

C. Device plates shall be smooth jumbo 302/304 stainless steel, unless noted otherwise.

D. Weatherproof covers shall be manufactured by Taymac Company. Jumbo deep coverplates for “In Use” plug attachment.

E. Special outlets shall be as indicated on the drawings.

F. Provide coverplates for all telephone, data, and special outlets.

G. Comparative wiring devices by Leviton, General Electric, Slater, or Sierra are acceptable.

2.7 PANELBOARDS

A. Panelboards for lighting and appliance circuits shall be of the dead-front type with bolt-on type molded case circuit breaker branches. Details of construction including service voltage, number and rating of branches, size of mains, and whether surface or flush mounting are indicated on the drawings. 120/208 volt panelboards shall be Square-D type NQOB with breakers rated 65,000 RMS Sym. amps. Series rating may be used. Multi-pole breakers shall be a common trip (breaker tie handles not permitted). Provide directory frame on door with typewritten card listing circuit numbers and designations. All buswork shall be copper.

B. Fused distribution panelboards where indicated on the drawings shall be Type II, Class 1, U.L. listed. They shall be listed and labeled for Service Entrance equipment where drawings indicate this use. Integrated equipment short circuit rating shall be 200,000 max. RMS sym. amps with appropriately rated current limiting fuses. Branch switches shall be as indicated on the drawings with current limiting fuses. Panelboards shall be Square-D type QMB.

C. Comparative panelboards by Square-D, Westinghouse, General Electric, or Siemens-Allis-ITE are acceptable.

2.8 PLYWOOD BACKBOARDS

A. Provide plywood backboards where shown. Backboards shall be fire treated and shall be minimum 3/4" thick and sizes as shown or to accommodate equipment indicated to be mounted thereon.

B. Secure plywood to the building structure and paint with two coats of flat gray fire resistant paint.

2.9 SMOKE AND FIRE STOP FITTINGS

A. Smoke and fire stop fittings shall be U.L. listed for that purpose. The fittings used to seal conduit either on the outside of the conduit or internally shall have heat activated intumescent material which expands to fill all voids and shall be O.A./Gedney "FIRE-SEAL" or approved equal with an hourly fire-rating equal to or higher than the rating of the floor or wall through which the cable or conduit passes. The seals for conduit shall be of the flanged type. Approved equals by 3M and AD Fire Protection.

PART 3 - EXECUTION

3.1 CONDUIT

A. Rigid steel or IMC shall be used for feeders, branch circuits in concrete and for feeders and branch circuits where exposed to damage and exposed less than 8' above finished floor.

B. EMT, when not underground or in concrete, and not exposed to damage, shall be used for branch circuits, fire alarm, data /voice, and video.

C. Plastic conduit may be installed for underground service into building from Power Company transformer to Main Service and for exterior runs for site lighting. A plastic to rigid steel or intermediate metal conduit to rise above grade. Provide green equipment grounding conductors in all plastic conduits.

D. Conduit shall be continuous from outlet to outlet, from outlet to cabinet, junction box and pull box. Conduit shall enter and be secured to all boxes, etc. in such a

manner that each system will be electrically continuous from service to all outlets. All conduit from cabinets and junction boxes shall terminate in approved outlet boxes or conduit fittings. Conduit connections to any box which has no threaded hub shall be double locknutted.

E. Provide junction boxes or pull boxes where shown and where necessary to avoid excessive runs or too many bends between outlets. The conduit sizes shown may be increased if desired to facilitate the pulling of cables.

F. All conduit shall be concealed unless indicated otherwise. Install exposed conduit parallel with or at right angles to the building walls and support from walls or ceilings at intervals required by Code with approved galvanized iron clamps or hangers. Concealed conduit above the ceiling shall be supported independent of ceiling construction. Where ceilings of lay-in type are used, conduit must be installed high enough to permit removal of ceiling panels and lighting fixtures. Use threaded rods and hangers for supporting single conduit. Use trapeze hangers consisting of double-nutted threaded rods and "Unistrut" channels or angles of 12 gauge minimum steel for supporting multiple conduit.

G. Minimum size conduit for branch circuits shall not be smaller than ½". Home runs shall extend from outlets shown to panel designated. Home runs shown may be combined where running to the same panelboard. Limit maximum number of home runs per conduit to three (3).

H. At couplings, conduit ends shall be threaded so that they meet in the coupling. Right and left hand couplings shall not be used; conduit couplings of the Erickson type shall be used at locations requiring such joints.

I. All conduit for future use and for telephone wire shall be left with No. 16 gauge wire pulled in them and the ends securely corked or capped.

J. Expansion fittings shall be installed in all conduit which pass through expansion joints.

K. Provide non-hardening elastic type duct seal compound, Neer No. DC, 3M Co. "Scotchfil", or Gardner Bender duct seal, for each conduit entering the building from outside and for each conduit passing from one space into another which is normally at a lower temperature.

L. Space in sleeves or around conduit that pass through fire resistive or fire rated walls, partitions, floors or ceilings shall be closed by packing with a fire resistive material that will maintain the rating of the barrier penetrated.

3.2 FLEXIBLE CONDUIT

A. PVC extruded cover flexible conduit shall be used in making short flexible connections to rotating or vibrating machinery or equipment. The flexible conduit

at these locations shall be as short as possible, but shall have a minimum length of 12".

B. A green stranded bonding jumper shall be installed outside of all flexible conduit that extends directly from a non-flex conduit to a rotating or vibrating machine. Where a junction box is used, the green stranded bonding jumper shall be installed inside the flexible conduit and attached to the junction box and to the machine. When the bonding jumper is installed outside of the flexible conduit, plastic wire straps shall be used 6" o.c. to secure the jumper to the flexible conduit.

C. Flexible Conduit not allowed in return air plenum.

3.3 CONDUIT PROTECTION

A. Conduit shall be secured in place and protected where necessary to prevent damage to work during construction. The ends of all conduit shall be plugged to avoid filling with any foreign matter. All conduit shall be blown out and swabbed clear of water and trash prior to pulling wire.

3.4 WIRING

A. All conductors shall be installed in conduit, unless otherwise noted. No conductors shall be pulled into the conduit until the conduit system is complete and plaster as dried. Only U.L. listed lubricants shall be used in pulling conductors.

B. Conductors shall be continuous from outlet to outlet and from outlet to junction box or pull box. All splices and joints shall be carefully and securely made to be mechanically and electrically solid with pressure type connectors, "SKOTCHLOK" or approved equal. Tape shall be "Scotch" No. 33 for indoor and No. 88 for outdoor or approved equal. Where connection is made to any terminals of more than 30 amperes capacity and where conductors larger than No. 10 are connected to any terminal, copper terminal lugs shall be bolted to the conductors. Where multiple connections are made to the same terminal, individual lugs for each conductor shall be used. Approved equal by Appleton and Steel City.

C. Each conduit shall have a minimum of two (2) conductors pulled in unless that particular conduit is noted as being empty for future use. The number of cross hatches indicates the number of conductors to be installed when the number exceeds the minimum of two (2). This does not apply to conduit installed for telephones and other special systems.

D. Conductors for lighting and receptacles circuits shall have color coded jackets. The wiring shall be color coded with the same color used with its respective phase through the entire job as follows:

208/120 VOLT SYSTEM
Phase A - Black
Phase B - Red
Phase C - Blue
Neutral - White
Ground - Green

E. The feeder and service entrance conductors shall be color coded by the use of colored plastic tape applied within 6" of each conductor end.

F. Branch circuit conductors shall not be smaller than No. 12 and where the home run from center of load exceeds 100'-0", the conductors from home run outlet to panel shall be No. 10 minimum.

G. Branch circuit wiring which supplies more than one (1) fluorescent fixture through wireway of other fixtures shall be rated for use at 105 degree C.

H. For branch circuits terminating in outlet without device, leave minimum of 12" of slack wire with taped ends and coiled for connection of equipment. All conductors shall be identified with proper circuit numbers at terminals and junction boxes.

3.5 OUTLETS

A. Provide galvanized steel or cast type boxes for all outlets.

B. Where outlet boxes are used to support lighting fixtures, the outlet box shall be anchored to the structural members of the building.

C. Outlet boxes shall be flush mounted unless they are specifically shown as being used with exposed conduit or are located above a ceiling.

D. Where outlets are supplied from conduit in or below floor slabs, the conduit shall be stubbed up at the location shown and the wall built up around the conduit.

E. Cuts for outlet boxes in masonry walls shall be made so that the coverplate will completely cover the cut. The mounting height of switch, receptacle and other outlets may be varied slightly, with the Architect's approval, so that the outlet box, top or bottom, will occur at a masonry joint.

F. The edge of all outlet boxes shall be flush with the surface in which they are recessed. The devices that fit into the outlet boxes shall be screwed tight before the cover plate is installed and the cover plate shall not be used as a means of tightening the device in place.

G. Where outlets are shown as being adjacent and different mounting heights are specified for each, they shall be mounted one directly over the other, on the center line of the group.

3.6 NAMEPLATES

A. Provide engraved laminated white core nameplates on the main switchboard, feeder switches, feeder breakers, distribution panels, panelboards, disconnect switches, contactors, starters, time switches, start-stop push buttons and motor switches that do not have one.

B. Nameplates for surface mounted equipment shall be installed on the exterior of equipment with sheet metal screws. Nameplates for flush or recessed mounted equipment shall be installed on the inside of the panel door or cover with epoxy cement.

3.7 WALL SWITCHES AND RECEPTACLES

A. Where more than one device is indicated at a location, the devices shall be mounted in combined sectional gang boxes and covered jointly by a common coverplate.

B. Locations of outlets shown on the drawings are relative and approximate unless noted otherwise. Exact locations shall be determined on the job and the outlets accurately set according to architectural drawings, dimensions and Architect's direction. Unless otherwise required, indicated, or directed, outlet boxes shall be placed such that bottom of the device plate, when installed, shall be the following distances above the finished floor:

Switch Outlets	3'-10"
Wall receptacles	1'-6"
Clock outlets	7'-6"
Wall telephone/data	1’-6”
Special outlets	As Noted

3.8 COVERPLATES

A. All junction boxes, outlet boxes, sectional switch boxes, utility boxes, etc., shall be covered with a coverplate. The coverplate shall be a finished plate as specified unless designated otherwise.

B. Coverplates shall be mounted vertically unless designated otherwise.

3.9 GROUNDING

A. Ground connections shall be in accordance with the National Electrical Code requirements.

B. Provide an 8" long green grounding wire from the grounding lug of all receptacles to a Steel City "G" clip or a sheet metal screw in the outlet box. The ground wire installed behind the device mounting screws will not be acceptable.

C. Provide an insulated green bonding jumper from the metal housing of wall mounted or suspended light fixtures to the grounded outlet.

3.10 CONNECTION TO EQUIPMENT

A. Equipment furnished by the Owner or under other Sections, such as Mechanical Equipment, Elevators, Signs, Kitchen Equipment, etc. will be installed by others. Provide electrical service and make the electrical circuit connections to this equipment as directed.

3.11 EQUIPMENT SUPPORTS

A. The Contractor shall furnish and install all necessary supports for mounting electrical apparatus. All structural shapes, rods, bolts, nuts, etc., used to support electrical equipment shall be galvanized.

3.12 PAINTING

A. Except as specified herein, painting will be done as described in other divisions of the specifications, but the electrical installation shall be free of rust, dirt, grease, and other foreign material.

B. Equipment with a factory applied finish shall have scratches, chips, etc., repaired and refinished to the satisfaction of the Architect.

3.13 CUTTING AND PATCHING

A. Set sleeves for conduit accurately before the concrete floors are poured, or set boxes on the forms so as to leave openings in the floors in which the required sleeves can be subsequently located. Fill in the concrete voids around the sleeves.

B. Should the performance of this preliminary work be neglected and should cutting be required in order to install conduit, then the expense of the cutting and restoring of surfaces to their original conditions shall be accomplished without incurring additions to the Contract.

END OF SECTION 16100

SECTION 16400 - SERVICES AND DISTRIBUTION

PART 1 - GENERAL

1.1 RELATED DOCUMENTS

A. Drawings and general provisions of the Contract, including General and Supplementary Conditions, and Division 01 Specification Sections, apply to this Section.

1.2 SUMMARY

A. Work under this section is for the installation of underground power supply for the building.

B. Related Sections: The following sections contain requirements that relate to this Section:

1. Division 01 Section “Project Record Documents” for submitting Record Drawings, Record Specifications, and Record Product Data.
2. Section 16010 Electrical General Provisions
3. Section 16100 Basic Materials and Methods

1.3 SYSTEM VOLTAGE

A. System Voltage shall be 120/208 volts, 3-phase, 4-wire, from the pad-mounted transformers to the main service and distribution panel in the building.

PART 2 - PRODUCTS

2.1 CONDUIT

A. All service conduits to be PVC and encased in 3000 psi concrete.

PART 3 - EXECUTION

3.1 Provide the underground primary and secondary conduit systems complete, including all excavation, backfill, trenching, spacers, stakes, conduit, etc., as indicated on the drawings, and as required.

3.2 The Contractor shall install underground service conduit from the main panel to the transformer. Cable shall be pulled in by and connections made by Contractor.

3.3 The Contractor shall secure all permits and make all arrangements with the school for the connection of electrical service to the building and coordinate metering requirements.

3.4 All equipment and service shall be grounded in strict accordance to requirements of the NEC, and local regulations. Ground rods shall be copper-clad 3/4" diameter, 10 feet long driven full length into the earth. The maximum resistance shall not exceed 25 ohms under normally dry conditions.

3.5 Provide warning tape 12” above all underground service conduits.

END OF SECTION 16400

SECTION 16500 - LIGHTING

PART 1 - GENERAL

1.1 RELATED DOCUMENTS

A. Drawings and general provisions of the Contract, including General and Supplementary Conditions, and Division 01 Specification Sections, apply to this Section.

1.2 SUMMARY

A. The work included under this section includes the furnishing and installation of all light fixtures.

B. Related Sections: The following sections contain requirements that relate to this Section:

1. Section 01 8113 "Sustainable Design Requirements"
2. Division 01 Section "Closeout Procedures" for submitting operation and maintenance manuals.
3. Division 01 Section "Operation and Maintenance Data" for operation and maintenance manual requirements.
4. Section 16010 Electrical General Provisions
5. Section 16100 Basic Materials and Methods

1.3 SUBMITTALS

A. Manufacturer's literature describing product.

B. Shop drawings, showing elevations, sections and method of installation.

PART 2 - PRODUCTS

2.1 Lighting fixtures shall be furnished complete with mounting accessories to suit the specific service intended. Fixtures shown in the schedule to be recessed will be complete with accessories to furnish support from the structure above and/or any other accessories required to fit the above fixtures to the ceiling construction.

2.2 Fixtures scheduled to be pendant mounted shall be complete with supports above the ceiling, stems and canopies, swivel aligners and/or other accessories necessary to suspend the fixtures at the specified height above the floor.

2.3 Fixtures scheduled to be surface mounted shall be furnished and installed employing supports above the ceiling, toggle bolts and any other accessories which are required to adequately support the fixtures.

2.4 Fluorescent fixtures in continuous rows shall be supplied with all fixture couplings, chase nipples, and/or other accessories recommended by the manufacturer for continuous row installation.

2.5 Fluorescent fixtures shall be complete with class "P" electronic ballasts designed to operate rapid start T8 Lamps. All ballasts shall conform to the following standards:

A. Ballast shall meet sound rating "A".

B. Ballast shall meet ANSI Standards.

C. Ballast shall have a minimum power factor of .98.

D. Ballast shall have less than 15% total harmonic distortion, less than 8% third harmonic distortion.

E. Ballast shall comply with EMI and RFI Limits set by the FCC (CFR 47 Part 18) for non-residential applications and not interfere with normal electrical equipment.

F. Ballast shall operate lamps at a frequency of 25 KHz or Higher with less than 2% lamp flicker.

G. Provide Two (2) Year Warranty.

H. Maintain full cathode heat during operation.

I. Ballast shall have less than 1.5 lamp current crest factor (LCCF)j.

J. Light output shall remain constant for line voltage fluctuation +-5%.

K. Accepted Manufacturers are Motorola, Advance, Magnatek, and Triad.

2.6 Lamps shall be furnished and installed in all fixtures. All incandescent lamps shall be general service inside frosted 2500 hour life, of type required. Fluorescent lamps shall be energy saving type. Refer to the light fixture schedule on the drawings for complete information. All lamps shall be Phillips, G.E., or OSRAM/Sylvania.

2.7 Exit signs shall have metal stencils, red letters with a lamp life of 50,000 hours.

2.8 Refer to drawings for Lighting Fixture Schedule and Lamps.

2.9 DIFFUSERS

A. Unless specified otherwise, all prismatic diffusers for fluorescent lighting fixtures shall be prismatic acrylic KSH K12 or approved equal with a thickness of 0.156", measured from the back side of the peak of the prism.

B. All wraparound lens shall be virgin acrylic, one-piece and injection molded.

2.10 LIGHTING FIXTURE TRIM

A. Each recessed lighting fixture shall have a trim to match the type of ceiling (plaster, exposed grid, concealed spline, exposed panel, etc.) in which it is being installed, regardless of catalog number given. Coordinate with the Architect's Reflected Ceiling plan to provide the right trim for the type of ceiling in which the fixture is to be installed.

B. Each lighting fixture recessed in a plastered ceiling of any type shall have a plaster frame.

2.11 OTHER MATERIAL

A. All other materials and accessories, not specifically described or called for, but which are required for a complete and finished installation for the work of this section shall be furnished and installed by the Contractor at no additional cost to the Owner. These materials shall be selected by the Contractor, subject to be reviewed by the Architect.

PART 3 - EXECUTION

3.1 Carefully install all the schedule and all specified lighting fixtures in each of the areas indicated. Fixtures shall be furnished to exactly fit the type of ceiling system as scheduled for the space.

3.2 Fixture mounting details shall be checked with the ceiling details and flanges, lay-in or wet or dry ceiling mounting shall be verified before the fixtures are ordered. The Contractor shall coordinate this item. Fluorescent fixture shall be installed with (2) 12 gauge wires. Lay-in fixtures shall be installed with alignment clips and 12 gauge wires.

3.3 Each fixture shall be marked in wiring compartment with circuit number supplying fixture. Marking may be with permanent ink marker.

3.4 All flexible conduit used to connect lay-in fixtures to junction boxes shall have 2 #12 power and 1 #12 green ground wire minimum in ½" flex. All wire shall be flexible stranded.

3.5 All exit signs shall be installed so that they can be seen in all directions. They shall not be installed behind any pipe or other piece of equipment. The stems on all ceiling mounting lights shall be of such length that the lights shall be visible.

3.6 SUPPORT OF LIGHTING FIXTURES

A. All lighting shall be supported from the building structure. The fixtures shall be supported in a manner that will insure the fixture weight being equally distributed from each support and the fixture remaining in a level position.

B. Fluorescent fixtures installed recessed in a suspended ceiling system shall be supported from the building structure with two (2) 12 gauge wires on diagonal corners of the fixture. In addition, the fixture shall be clipped to members of the ceiling suspension system.

C. Fluorescent fixtures installed in or on any ceiling other than a suspended ceiling system specifically mentioned above shall be supported with concealed steel rods. Rods shall be 1/4" diameter minimum and shall be located where recommended by the fixture manufacturer. Provide a minimum of two (2) supports for each 4' or 8' fixture chassis. Supports shall be a maximum of 48" centers. For incandescent fixtures, steel hanging wire may be used by attaching the wire to fixture mounting frame.

D. Pendant mounted incandescent fixtures shall be stem supported by a fixture stud mounted in the outlet box. Suspended fluorescent fixtures shall have mounting stems located as per the manufacturer's recommendations, but in no case shall have less than two (2) stems per chassis.

3.7 FINAL

A. Protect finished installation from damage by other trades.

B. Remove rubbish and left over materials from the site.

END OF SECTION 16500

SECTION 16720 - FIRE ALARM SYSTEM

PART 1 - GENERAL

1.1 RELATED DOCUMENTS

A. Drawings and general provisions of the Contract, including General and Supplementary Conditions, and Division 01 Specification Sections, apply to this Section.

1.2 SUMMARY

A. The work covered by this section of the specifications includes the furnishing of all labor, equipment, materials, and performance of all operations in connection with the installation of the Fire Alarm System as shown on the drawings and as herein specified.

B. The requirements of the Conditions of the Contract, Supplementary Conditions and General Requirements, apply to the work specified in this section.

C. The complete installation is to conform to the applicable sections of NFPA-72, Local Code Requirements and the National Electrical Code with particular attention to Article 760.

D. Additionally, the entire installed system and all integrated system operations shall be within the guidelines of the SBCCI Standard Building Code.

E. The work covered by this section of the specifications is to be coordinated with the related work as specified elsewhere under the project specifications.

1.3 QUALITY ASSURANCE

A. Each and all items of the Fire Alarm System shall be listed as a product of a SINGLE fire alarm system manufacturer under the appropriate category by Underwriters' Laboratories, Inc. (UL), and shall bear the "U.L." label. All control equipment is to be listed under UL category UOJZ as a single control unit. Partial listing shall NOT be acceptable.

B. Manufacturer: The Manufacturer shall be a nationally recognized company specializing in fire alarm systems. This organization shall employ factory trained NICET certified technicians, and shall maintain a service organization within 50 miles of this project location. The manufacturer and service organization shall have a minimum of 10 years' experience in the fire protective signaling systems industry.

C. Installer: The installation organization shall be a company specializing in the installation of fire alarm systems. This organization shall be a UL listed fire alarm

installation company and shall have a minimum of 10 years of experience with installation of fire protective signaling systems.

1. The installation of the Fire Alarm System components, wiring, etc. shall be performed by an EST Strategic Partner and shall be supervised by a fire alarm technician with a minimum Level III NICET certification. The fire alarm installers must be W2 employees of the fire alarm contractor and have immigration statuses satisfactory with the state of Georgia and criminal background checks satisfactory with the building owner. The Fire Alarm contractor is responsible for running a current immigration and back ground check on all of its employees that will be on the project. No work is to be installed by the Fire Alarm Contractor unless the company meets the above requirements. A copy of the NICET Level III Certification will be provided to the Owner prior to the commencement of the installation of the Fire Alarm System. The Fire Alarm System shall be installed in accordance with the Manufacturer's Specifications and the approved submittal documents.
2. The Fire Alarm contractor shall have in-house engineering and project management capability consistent with the requirements of this project. Qualified and approved representatives of the system manufacturer shall perform the detailed engineering design of central and remote control equipment. Qualified and approved representatives of the system manufacturer shall produce all panel and equipment drawings and submittals, operating manuals. The contractor is responsible for retaining qualified and approved representative(s) of those system manufacturers specified for detailed system design and documentation, coordination of system installation requirements, and final system testing and commissioning, in accordance with these specifications.

1.4 GENERAL

A. Furnish and install a complete Fire Alarm System as described herein and as shown on the plans; to be wired, connected, programmed, tested and left in a fully operating condition.

B. All panels and peripheral devices shall be the standard products of Edwards Systems Technology (EST).

C. It should be noted that in the list of approvals where a manufacturer has been approved for a certain product, it is understood that the manufacturer has been approved as being capable of producing this product. This does not necessarily constitute approval of his standard product. His product must still comply with all of the requirements and standards of this specification and not necessarily his standard specification.

1.5 SUBMITTALS

A. Submit Manufacturer product data sheets for all proposed devices and equipment.

B. Provide layout drawings, wiring diagrams, equipment ratings, dimensions, and finishes for all proposed devices and equipment.

1.6 PROJECT RECORD (AS-BUILT) DRAWINGS

A. The Contractor shall provide and maintain on the site an up-to-date record set of approved shop drawings.

B. Record drawings shall include location of end-of-line device locations.

1.7 OPERATION AND MAINTENANCE DATA

A. Submit four bound sets of Manufacturer data sheets for all equipment installed.

B. Operation and Maintenance Data: For fire-alarm systems and components to be included in emergency, operation, and maintenance manuals. In addition to items specified in Division 1 Section "Operation and Maintenance Data, include the following:

C. Comply with the "Records" Section of the "Inspection, Testing and Maintenance" Chapter in NFPA72.

D. Provide "Record of Completion Documents" according to NFPA72 article "Permanent Records" in the "Records" Section of the "Inspection, Testing and Maintenance" Chapter.

E. Record copy of site-specific software database file, hardcopy print-out and CD, with password for delivery to the owner. Proprietary system/service companies will not be acceptable.

F. Provide "Maintenance, Inspection and Testing Records" according to NFPA72 article of the same name and include the following:

G. A system program training CD shall also be turned over to owner where as the owner prior to making changes can refresh on proper use of software.

1. Frequency of testing of installed components.
2. Frequency of inspection of installed components.
3. Requirements and recommendations related to results of maintenance.
4. Manufacturer's user training manuals (hardcopy) and electronic on CD.
5. Manufacturer's required maintenance related to system warranty requirements.
6. Abbreviated operating instructions for mounting at fire-alarm control unit.
7. Copy of NFPA72.

H. Software and Firmware Operational Documentation:

I. Software operating and upgrade manuals.

1. Program Software Backup: On magnetic media or compact disk, complete with data files.
2. Device address list.
3. Printout of software application.
4. CD of site-specific software database file with password, and electronic product data sheets. Provide hard copy print-out of the software program. Proprietary system/service companies will not be acceptable.
5. Provide a complete system comparison report for each change implemented during the warranty period.
6. Provide a list of global system settings
7. Provide a list of the contents of each system cabinet and their settings
8. Provide a list of all addressable devices with their addresses and settings

1.8 FIRE ALARM CONTROL PANEL AND SYSTEM OPERATION

A. All equipment furnished for this project shall be new and unused. All components and systems shall be designed for uninterrupted duty. All equipment, materials, accessories, devices, and other facilities covered by this specification or noted on contract drawings and installation specifications shall be the best suited for the intended use and shall be provided by a single manufacturer. If any of the equipment provided under this Specification is provided by different manufacturers, then that equipment shall be recognized as compatible by both manufacturers, and “Listed” as such by Underwriters’ Laboratories.

B. System installation and operations shall be verified by the manufacturer’s authorized strategic partner and a verification certificate presented upon completion. The manufacturer’s authorized strategic partner shall be responsible for an on-site demonstration of the operation of the system and initial staff training as required by the Contracting Agency.

C. The system shall be capable of detecting the electrical location of each Signature intelligent device. It shall be possible to display the intelligent device map on the laptop PC.

D. Operation of each alarm input device shall show on the LCD display at the main Control Panel the Remote Alphanumeric Display Annunciator. Each Intelligent device shall annunciate individually.

E. LCD display messages shall be approved by the Authority Having Jurisdiction and the Owner prior to equipment ordering and programming. Changes required by the AHJ or the Owner shall be implemented as directed.

F. The system shall be capable of displaying events by type (fire alarm, pre-alert, supervisory, and trouble). At the same time, the system shall sound a momentary audible signal for each event occurrence; flash an LED when an unacknowledged event exists, and, update the display to annunciate the total by type.

G. Upon alarm, the system shall sound the evacuation signals throughout the building and voice messages in areas defined as assembly occupied areas. (Auditorium, Gym, Cafeteria and Library).

H. Upon alarm, the system shall shut down air supply fans. Shutdowns shall be hardwired from the Fire Alarm System for supervision and located within 3 feet of the fan controls. (i.e., not implemented via building automation controls) and immediate acting, and shall not be overridden by Hand-Off-Auto switches or other controls.

I. Upon alarm, the system shall de-energize door holders to release fire doors. Provide separate circuit(s) as necessary for operation of all door holders. If door holders are 120VAC, circuits shall be from the same panel board used to supply the fire alarm control panel. If door holders are 24V, circuits shall be from the fire alarm control panel using 120VAC to 24VDC power supplies. Door holder circuits shall be fused as necessary to prevent damage to the Fire Alarm System. Submit for approval all proposed power sources prior to installation or connection of equipment.

J. Upon alarm initiated by the sprinkler flow switch(es), the system shall sound the exterior sprinkler bell and sound the evacuation signals throughout the building. The sprinkler bell shall be supplied by a non-silenceable supervised notification circuit.

K. Upon alarm, the system shall de-energize smoke dampers and smoke/fire dampers to close dampers. Provide a commandable relay for control of each damper, these relays must be within 3 feet of the damper control.

L. Detectors for operation of fire/smoke dampers in elevator shafts without sprinkler protection shall generate an alarm condition and cause operation of the associated damper, but shall not generate a general building alarm. Detectors associated with other smoke/fire dampers shall generate a general building alarm.

M. Upon alarm, the system shall activate the Intercom System Fire Alarm warning functions specified in Section - Intercom System. Silencing of the fire alarm signal shall automatically silence the Intercom signal.

N. In addition to the above upon alarm, the system shall sound speakers & lights in Sanctuary, Social Hall and Large Classroom Areas.

1.9 SUPERVISION

A. The system shall contain Class 'B' (Style 'B') independently supervised addressable circuits. The indicating circuits shall be Class B.

1.10 POWER REQUIREMENTS

A. The control panel shall receive 120 VAC power (as noted on the plans) via a dedicated circuit fed by a circuit breaker.

B. The system shall be provided with sufficient battery capacity to operate the entire system upon loss of normal 120 VAC power in a normal supervisory mode for a period of four (4) hours with 5 minutes of alarm operation at the end of 24 hour period.

1.11 SYSTEM WIRING

A. Wiring types will be approved by the equipment manufacturer.

PART 2 - PRODUCTS

2.1 NOTIFICATION APPLIANCES

A. Visual Flashing Lamps (ADA): Visual indicating appliances shall be comprised of a strobe and be entirely solid state and shall meet the requirements of ADA.

B. Audio/Visual Alarm Indicating Appliance (Horn/Lights): Audio/Visual units shall be comprised of a strobe and be entirely solid state and shall meet the requirements of ADA.

C. Audio/Visual Alarm Indicating Appliance (Speaker/Lights): Audio/visual units in the Auditorium, Gym, Cafeteria and Library shall consist of a strobe light and speaker with protective covers in Gym.

D. All appliances shall be of the same manufacturer as the Fire Alarm Control Panel specified to insure absolute compatibility between the appliances and the control panels, and to insure that the application of the appliances are done in accordance with the single manufacturers' instructions.

E. Any appliances, which do not meet the above requirements, and are submitted, for use must show written proof of compatibility for the purpose intended. Such proof shall be in the form of documentation from all manufacturers which clearly states that their equipment (as submitted) are 100% compatible with each other for the purposes intended. All appliances shall be UL listed Fire Protective Service and shall be UL 1971.

F. Notification Appliances – Visual

1. Provide wall or ceiling mounted red strobes with in-out screw terminals shall be provided for wiring. Strobes shall provide a smooth light distribution pattern field selectable candela 15 cd, 30 cd, 75 cd, and 110 cd flash output rating. The strobe (15, 30, 75, 110) candela rating shall be visible from the side window to verify the setting. All strobes shall be synchronized to within 10 milliseconds for an indefinite period and shall not require the use of separately installed remote synch modules. The strobes shall mount to one-gang electrical box.
2. The device shall have plastic protective cover for during installation.
3. The actual candela setting on the visual shall be marked on the appliance.
4. Provide EST model Genesis Series devices - White

G. Notification Appliance - Horn

1. Provide low profile wall mount horns at the locations shown on the drawings. The horn shall provide a 95 dB sound output at 10 ft. when measured in reverberation room per UL-464. The horn shall have a selectable steady or synchronized temporal output. In and out screw terminals shall be provided for wiring. The horn shall mount in a 1-gang box.
2. The device shall have plastic protective cover during installation.
3. Provide EST model Genesis Series device – White.

H. Notification Appliance – Horn/Strobe

1. Provide low profile wall mount horn/strobes in the locations shown on the drawings. The horn/strobe shall provide an audible output of 95 dB at 10 ft. when measured in reverberation room per UL-464. Strobes shall provide synchronized flash outputs. The strobe output shall be determined as required by its specific location and application from a family of 15cd, 30cd, 60cd, 75cd & 110cd devices. The horn shall have a selectable steady or synchronized temporal output. In and out screw terminals shall be provided for wiring. Low profile horn/strobes shall mount to one-gang box.
2. The device shall have plastic protective cover during installation.
3. Provide EST model Genesis Series device – White.

I. Notification Appliance – Harsh Environment Temporal Horn/Strobes

1. Provide red electronic horn/strobes at the locations shown on the drawings. Horns shall be temporal output. At the high output setting, the horn shall provide an 85 dB continuous sound output or a 95 dB temporal sound output, when measured in reverberation room per UL-464. Strobes shall provide 15 cd, 75 cd, 110 cd synchronized flash outputs without the use of separate “synchronizing” modules. The strobe shall have lens markings oriented for wall or ceiling mounting.
2. In - Out screw terminals shall be provided for wiring. Horns shall mount to a North American 4” electrical boxes (2-1/8” deep) or to a 2-gang (2-3/4”

deep) electric box. Weatherproof wall boxes shall be provided for outdoor applications.

3. Provide EST model 757 series - White

2.2 ADDRESSABLE DEVICE TYPES

A. Double Action Manual Fire Alarm Box, SIGA-278

1. Provide intelligent double action, single stage manual fire alarm box (SIGA-278). The manual fire alarm box shall be of Lexan construction with an internal toggle switch. Provide a key locked test feature. Finish the manual fire alarm box in red with white “PULL IN CASE OF FIRE” lettering.

B. Manual Fire Alarm Box Covers

1. Provide manual fire alarm box cover, STI "Stopper II", over each manual fire alarm box, unless otherwise noted. They shall consist of a tamper-proof; clear Lexan polycarbonate shield and frame suitable for mounting over flush-mounted or surface-mounted manual fire alarm boxes. The cover shall contain an integral horn that will sound an 85 db warning tone when the cover is lifted. The power source shall be a 9-volt dc alkaline battery included with the unit.

C. The System Intelligent Detectors shall be capable of full digital communications using both broadcast and polling protocol. Each detector shall be capable of performing independent fire detection algorithms. The fire detection algorithm shall measure sensor signal dimensions, time patterns and combine different fire parameters to increase reliability and distinguish real fire conditions from unwanted deceptive nuisance alarms. Digital filters shall eliminate signal patterns that are not typical of fires. Devices not capable of combining different fire parameters or that do not employ digital filters shall not be acceptable.

D. Each detector shall have an integral microprocessor capable of making alarm decisions based on fire parameter information stored in the detector head. Distributed intelligence shall improve response time by decreasing the data flow between detector and Analog loop controller. Detectors not capable of making independent alarm decisions shall not be acceptable. Maximum total Analog loop response time for detectors changing state shall be 0.5 seconds.

E. Each smoke detector shall be capable of transmitting pre-alarm and alarm signals in addition to the normal, trouble and need cleaning information. It shall be possible to program control panel activity to each level. Each smoke detector may be individually programmed to operate at any one of five (5) sensitivity settings.

F. Each detector microprocessor shall contain an environmental compensation algorithm that identifies and sets ambient “Environmental Thresholds” approximately six times an hour. The microprocessor shall continually monitor

the environmental impact of temperature, humidity, other contaminates as well as detector aging. The process shall employ digital compensation to adapt the detector to both 24 hour long-term and 4 hour short-term environmental changes. The microprocessor shall monitor the environmental compensation value and alert the system operator when the detector approaches 80% and 100% of the allowable environmental compensation value. Differential sensing algorithms shall maintain a constant differential between selected detector sensitivity and the "learned" base line sensitivity. The base line sensitivity information shall be updated and permanently stored at the detector approximately once every hour.

G. The intelligent Analog device and the Analog loop controller shall provide increased reliability and inherent survivability through intelligent Analog standalone operation. The device shall automatically change to standalone conventional device operation in the event of a loop controller polling communications failure. In the Analog standalone detector mode, the Analog detector shall continue to operate using sensitivity and environmental compensation information stored in its microprocessor at the time of communications failure. The Analog loop controller shall monitor the loop and activate a loop alarm if any detector reaches its alarm sensitivity threshold.

H. Each Signature Series device shall be capable of automatic electronic addressing and/or custom addressing without the use of DIP or rotary switches. Devices using DIP or rotary switches for addressing, either in the base or on the detector shall not be acceptable.

I. All Signature series "2" devices shall have the ability to have a CO detector integrated into the devices.

J. The intelligent Analog detectors shall be suitable for mounting on any Signature Series detector-mounting base.

1. Provide intelligent combination fixed temperature/rate-of-rise heat detectors (SIGA2-HRS).
2. Photoelectric Smoke Detector, SIGA2-PS Provide intelligent photoelectric smoke detectors (SIGA2-PS). The smoke detector shall be modular and allow for replacement of the photoelectric chamber, should the detector become dirty enough to require it.
3. Carbon Monoxide Detector – SIGA2-COS Provide intelligent carbon monoxide detector – SIGA2-COS. The carbon monoxide detector shall be an intelligent device that gathers analog information from its CO sensor converting this data into digital signals.

K. Door Holders shall be furnished and installed under this section of the specifications. They shall be surface, wall mounted, 24v-dc operation with a minimum holding force of 25 pounds.

L. Water Flow Switches: These switches shall be furnished under another section of the specifications. They shall be wired by the electrical contractor and interfaced into the fire alarm system by using an addressable module.

M. OS&Y Tamper Switches: These switches shall be furnished under another section of the specifications. They shall be wired by the electrical contractor and interfaced into the fire alarm system by using an addressable module. This addressable module shall be Simplex part number 2190-9172.

2.3 FIRE ALARM CONTROL PANEL

A. The control panel shall contain a microprocessor with 10/100 Ethernet media access controller (MAC). The system shall be designed specifically for fire detection, and notification applications. The control panel shall be listed and approved for the application standard(s) as listed under the General section. Panel shall be EST iO500.

B. Digital Alarm Communicator Transmitter: The system shall have an integrated off premise communications capability using a digital alarm communications transmitter (DACT) for sending system events to multiple central monitoring station (CMS) receivers. The system shall provide the CMS(s) with point identification of system events using Contact ID protocol. The dialer shall have the capability to support up to two (2) individual accounts and to send account information to two (2) different receivers, each having a primary and secondary telephone access number. System events shall be capable of being directed to one or more receivers depending on event type or location as specified by the system designed. In the event of a panel CPU failure during a fire alarm condition, the DACT degraded mode shall transmit a general fire alarm signal to the CMS.

1. Digital data transmission shall include the following (Contact ID)
   a. Address of the alarm-initiating device.
   b. Loss of ac supply or loss of power.
   c. Low battery.
   d. Abnormal test signal.
   e. Communication bus failure
2. Shall be EST, model SA-DACT.

C. The control panel shall include all required hardware, software and system programming to provide a complete and operational system. The control panel shall include the following capacities:

1. Support one loop of 250 analog/addressable points, expandable up to two loops for a total of 500 points.
2. Support up to 8 fully supervised remote annunciators.
3. Support digital dialer with Contact ID format
4. Support up to 1000 chronological events.

D. The control panel shall include the following features:

1. Ability to download or upload site applications and system diagnostics remotely through an Ethernet connection, or DACT.
2. Provide electronic addressing of analog/addressable devices. Rotary and dip switch addressing shall not be considered equal.
3. Provide an operator interface display that shall include functions required to annunciate, command and control system functions.
4. Provide an internal audible signal with different programmable patters to distinguish between alarm, supervisory, trouble and monitor conditions.
5. Provide system reports that provide detailed description of the status of system parameters for corrective action or for preventative maintenance programs. Reports shall be displayed by the operator interface or capable of being printed on a printer.
6. Provide an authorized operator with the ability to operate or modify system functions like system time, date, passwords, restart the system and clear control panel event history file.
7. Provide an authorized operator to perform test functions within the installed system.

E. The control panel shall provide the following intelligent and intuitive diagnostic software tools.

1. Fast Ground Check: Allow quick wiring diagnostics for ground faults every 4 seconds to troubleshoot ground faults much quicker and determine if they have been fixed or not.
2. Recalibrate Device: The control panel recalibrates any devices that have been cleaned. The Recalibrate Device feature will immediately reset the environmental compensation and dirtiness levels for faster verification of cleaned devices.
3. Test Fire: The control panel sends a test command to a detector or input module to activate. This allows for proper operation and programming testing of the device.
4. Flash Device LED: It shall be possible to activate any device LED from the control panel menu to help troubleshooting or locate a specific device on a loop.
5. Walk Test
   a. Walk test will allow the operator to test individual zones or devices without placing an alarm event on the system.
   b. It shall be possible to perform a walk test in a silent or audible test mode. Silent test mode shall display the test results on the LCD display. Audible test confirmation shall sound a coded signal on the systems NAC circuits.
   c. It shall be possible to activate Walk Test by zone or device to ensure the balance of the system remains in service to protect the premises.
   d. It shall be possible to view and print a walk test report showing the activation and restoration of all walk test events.

6. Device Maintenance
7. It shall be possible to view and print a report of all detectors dirtiness levels to optimize cleaning schedules. The report shall filter for all devices, devices that are 20% dirty or devices that are 80% dirty. The report shall show the device, how dirty it is by percentage and its sensitivity setting.
8. Detectors shall automatically send an alert message to the LCD Users Interface and illuminate the service detector LED when they reach 80% dirty and latch a trouble when they reach 100% dirty to ensure maintenance action is performed.

2.4 VOICE CONTROL PANEL

A. The voice control panel shall be for areas of assembly within the school with a maximum capacity of 300 or greater occupants.

B. The voice evacuation system shall be Edwards ANS Series or approved equal. The voice evacuation system shall provide 50 Watts voice power, and shall be UL Listed.

C. All speaker circuits shall be field selectable for 25VAC or 70 VAC operation and shall be power limited.

D. The voice evacuation system shall be microprocessor based, and shall contain an integral microphone 50 Watt audio amplifier, tone generator, digital message repeater, 120 VAC power supply, and battery charger.

E. The voice evacuation message/signal shall be broadcast until the Fire Alarm Control Panel (FACP) is reset, or until fire emergency personnel interrupt the broadcast with a manual page. On reset system shall automatically return to standby (normal operating) condition.

F. A secondary message shall be provided that can be triggered by the closure of a contact from either the FACP or from any normally open contact device.

G. Remote paging microphone(s) will be supported by the system through a supervised circuit. Remote microphone(s) may be mounted up to 5,000 ft. (1,524 m) away from the voice evacuation panel.

H. Provide remote microphone(s) locations as noted on the drawings. Remote Microphone shall be EST ANSREMG

2.5 REMOTE LCD ANNUNCIATOR R SERIES CONTROL EST RLCD-CR

A. Remote LCD Annunciator: shall have LCD display functions for alarm, supervisory, and trouble indications and common system controls including; acknowledge/silence, signal silence, reset, drill, and lamp test. Annunciator must support a 24 LED expander. Shall be housed in a metal enclosure with key lock door.

B. Remote LCD Annunciator: shall have LCD display functions for alarm, supervisory, and trouble indications and common system functions including; acknowledge/silence and lamp test. Annunciator must support a 24 LED expander. Shall be housed in a metal enclosure with key lock door.

C. Remote LED Annunciator: shall have LED display functions for alarm, supervisory, and trouble indications and common system controls including; acknowledge/silence, signal silence, reset, drill, and lamp test. Annunciator must support a 24 LED expander. Shall be housed in a metal enclosure with key lock door.

PART 3 - EXECUTION

3.1 INSTALLATION

A. Provide and install the system in accordance with the plans and specifications, all applicable codes and the manufacturer's recommendations. All wiring shall be installed in strict compliance with all the provisions of NEC - Article 760, Power-Limited Fire Protective Signaling Circuits. All junction boxes shall be sprayed red and labeled "Fire Alarm". Wiring color code shall be maintained throughout the installation.

B. All cables shall be plenum rated and have a red jacket. West Penn, General and Advanced Digital are approved cable vendors.

C. All cables shall be secured to the structure, any cables attached to the outside of conduit, plumbing, ceiling grid or any other subsystems will not be accepted. All cables secured to structure must be supported at the proper interval

D. All wiring leaving the envelope of the building shall be in conduit and be #12 AWG stranded copper conductors with 600 volt rated Type THHN/THW2•wiring as hereinbefore specified. The wire shall transition back to plenum once inside the envelope of the building.

E. Provide and install surge suppressors for all cables running into or out of the Fire Alarm Control Panel, Fire Alarm Circuit Extender Panel and on all circuits that are extended outside the building either underground or overhead between buildings and to PIV tamper switches. Surge suppressors shall be Ditek DTK-2MHLP-24B with Base installed to protect the panel end and properly grounded as required and per the Ditek instructions. Surge suppressors shall be installed in their own enclosure and not in the Fire Alarm Panels. If installed in the ceiling, the location shall be identified on the ceiling grid below the surge suppressor with a lime green adhesive dot with label indicating the device above.

F. Installation of equipment and devices that pertain to other work in the contract shall be closely coordinated with the appropriate subcontractors.

G. The contractor shall clean all dirt and debris from the inside and the outside of the fire alarm equipment after completion of the installation.

H. The manufacturer's factory trained technician employed as a W2 employee by an EST Authorized Strategic Partner shall provide on-site supervision of installation.

3.2 TESTING

A. The completed fire alarm system shall be fully tested in accordance with NFPA-72 by the EST Authorized Strategic Partner in the presence of the owner's representative and the Fire Marshal. Upon completion of a successful test, the EST Authorized Strategic Partner shall so certify in writing to the Owner and Construction Manager.

B. The manufacturer's factory trained technician employed as a W2 employee by an EST Authorized Strategic Partner shall test each device and the entire system to ensure proper operation. The Owner’s Representative shall be notified one week in advance of the scheduled tests so that he may witness the tests.

3.3 WARRANTY

A. The contractor shall warrant the completed fire alarm system wiring and equipment to be free from inherent mechanical and electrical defects for a period of one (1) year from the issue date of the building certificate of occupancy.

B. The EST Authorized Strategic Partner shall make available to the owner a maintenance contract proposal to provide a minimum of two (2) inspections and tests per year after the warranty expires in compliance with NFPA 72 guidelines.

END OF SECTION 16720